EINSTECHEN • ABSTECHEN • NUTFRÄSEN • NUTSTOSSEN • KOPIERFRÄSEN • BOHREN • REIBEN

# Modulare Langdrehtechnik

## Modular Technology for Swiss Type Machines

W&F Werkzeugtechnik

**2018/ 2019**

HORN

GROOVING • PARTING OFF • GROOVE MILLING • BROACHING • PROFILE MILLING • DRILLING • REAMING

W&F

ph HORN ph

# Inhaltsverzeichnis

Table of contents
Table des matiérs.


| Beschreibung / Description | Seite / Page |
|---|---|
| **Rundlauftoleranzen**<br>Runout tolerances | **1.2** |
| **Gebrauch und Wartung der WFB-Schnittstelle**<br>Handling and maintenance for WFB connection | **1.3** |
| **Produktvorteile der WFB-Schnittstelle**<br>Product advantages of WFB connection | **1.4** |
| **WFB Produktübersicht (Auszug)**<br>WFB Product overview | **1.8** |
| **Modularer Gewindewirbelkopf**<br>Thread whirling head modular | **1.10** |
| **CITIZEN** | **2** |
| **DMG MORI** | **3** |
| **HANWHA** | **4** |
| **MAIER** | **5** |
| **STAR** | **6** |
| **TORNOS** | **7** |
| **TSUGAMI** | **8** |
| **WFB statische Halter WFE/SHT**<br>WFB static holders WFE/SHT | **9** |
| **WF Micro – Modulare Drehhalter**<br>WF-Micro modular turning holders | **10** |
| **WFB – Adapter und Zubehör**<br>WFB – adapter and accessories | **11** |
| **Allgemeine Verkaufs- und Lieferbedingungen**<br>General sales terms and delivery conditions | **12** |


**WG = Warengruppe**
**Article group**
**Groupe de marchandise**

**WG 11 =** _____

**WG 35 =** _____

**WG 40 =** _____

# Rundlauftoleranzen

Runout tolerances
Tolérance de rotation

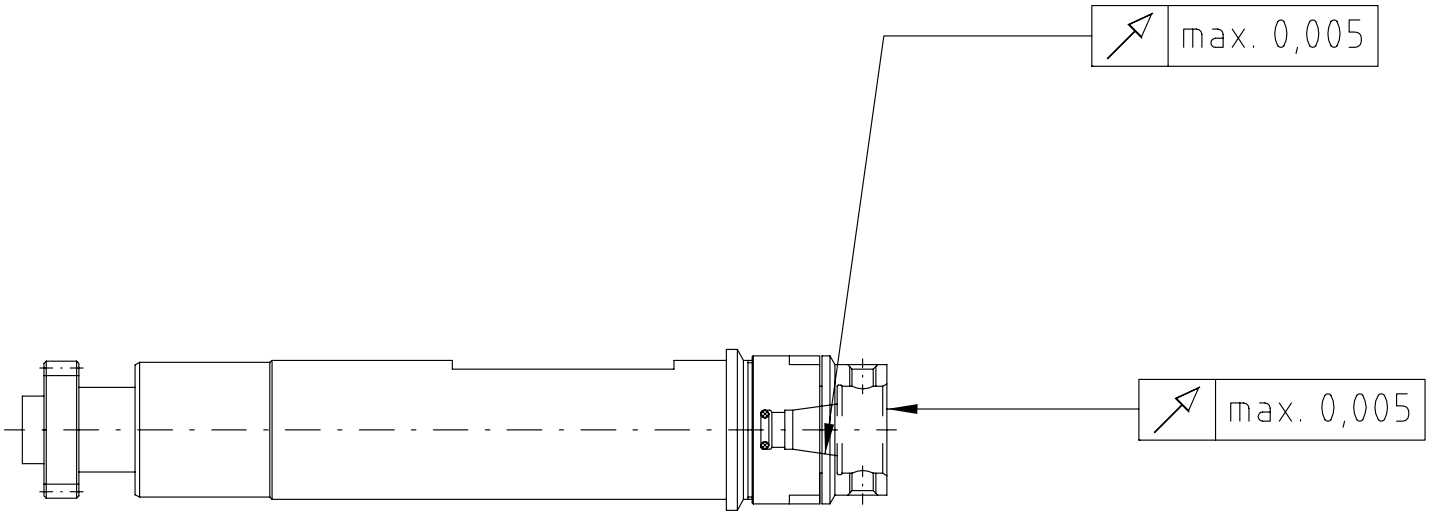


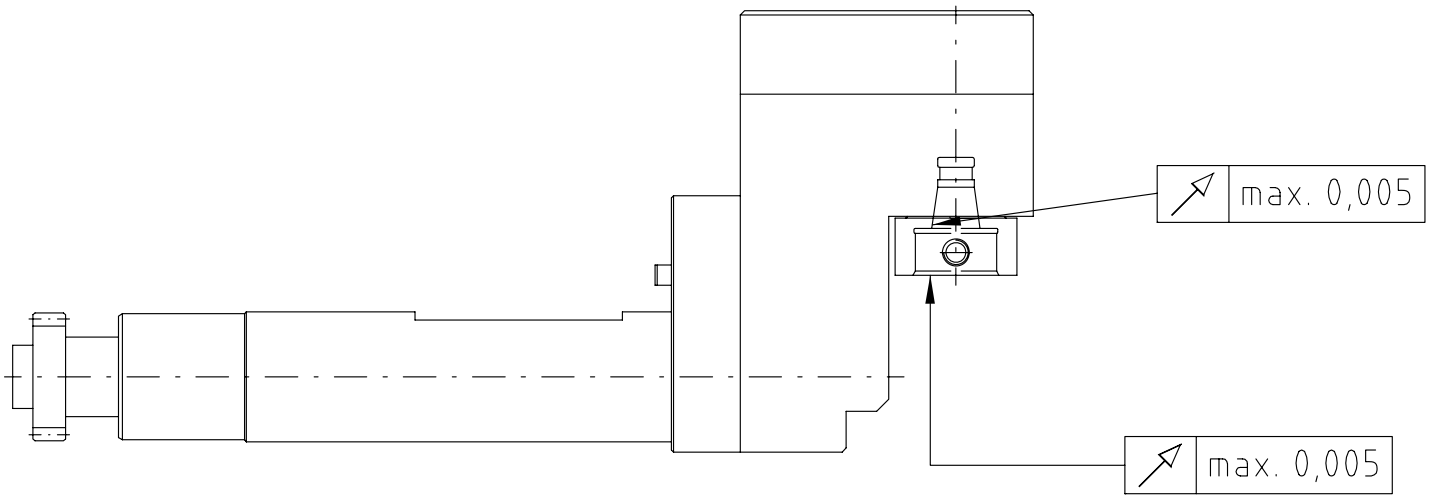

# Gebrauch und Wartung der WFB-Schnittstelle

Handling and maintenance for WFB connection
Manutention et maintenance pour WFB connexion

**Hinweis zur Befestigung**
Zunächst einen Kegelgewindestift anziehen, dabei 1-2 mal lösen und wieder anziehen. Dadurch wird eine optimale Positionierung der Bauteile erreicht. Der 2. Kegelgewindestift wird nun ebenfalls (wie oben angeführt) angezogen. Empfohlene Drehmomente entnehmen Sie der unteren Tabelle.

**Advice for fixing**
First tighten one threaded taper pin, in doing so 1 or 2 times unscrew and tighten again. Thereby you get an optimum positioning of the components. The second threaded taper pin you will thighten with the same method. Recommended locking torque see in the lower table.

**Pflege und Wartung**
Die Oberflächen der Planflächen, der Kegelbohrung und Kegelzapfen sind vor Gebrauch zu reinigen und mit einem Öl-Schmierfilm zu versehen. Um eine optimale Befestigung und Lösbarkeit der Kegelgewindestifte zu erreichen, wird empfohlen die Kegelgewindestifte mit z.B. Molykote 1000 oder einer ähnlichen Heiss-Schraubenpaste zu behandeln.

**Support and maintenance**
The surface of the face, the cone drill and cone pin must be cleaning and lubricate with oil before using. To reach an optimum fixing and resolvability of the threaded taper pins, are recommended to use for example Molykote 1000 or something similar.

**Empfohlene Anzugsdrehmomente**
Recommended locking torque / Retenue couple

| Größe | Kegelgewindestifte | Anzugs-Drehmoment |
|---|---|---|
| WFB20-12 | M6 x 0,75 / Torx 15 Plus | 4 Nm |
| WFB20-12 | M6 x 1 / Torx T15 | 4 Nm |
| WFB24-16 | M8 x 1 / Torx T25 | 10 Nm |
| WFB 32-20 | M10 x 1 | 25 Nm |

**Empfohlene Anzugsdrehmomente beim Einsatz von Kontrolldornen**
Recommended locking torque when running test arbors
Retenue couple à l'usage de Mandrins de contrôle

| Größe | Kegelgewindestifte | Anzugs-Drehmoment |
|---|---|---|
| WFB20-12 | M6 x 0,75 / Torx 15 Plus | 2 Nm |
| WFB20-12 | M6 x 1 / Torx T15 | 2 Nm |
| WFB24-16 | M8 x 1 / Torx T25 | 5 Nm |
| WFB 32-20 | M10 x 1 | 10 Nm |

# Produkt-Vorteile der WFB-Schnittstelle

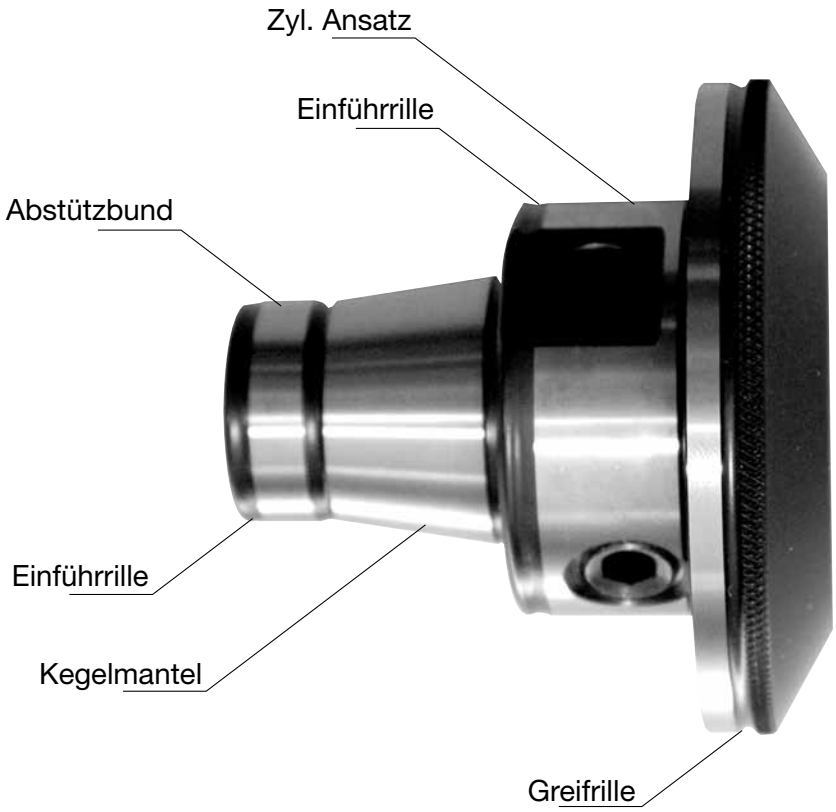


**Präzise**
Die Kegel/Plananlage mit zylindrischer Abstützung gewährleistet höchste Genauigkeit (2µ) und absoluten Form-schluß.

**Flexibel**
Spannzange, Weldon, Schrumpffutter, um nur die wichtigsten zu nennen, können alle in einen Grundhalter eingesetzt werden. Die Handhabung ist einfach und praxisgerecht.

**Kompakt**
Der extrem kompakte Aufbau gewährleistet eine optimale Kraftübertragung und Systemsteifigkeit. Daraus resultieren höhere Werkstückgenauigkeiten und verbesserte Produktivität.

**Orientierte Schneidenlage**
Auf Umschlag < 10 µ

**Reinigung**
Einfach, da überall leicht zugänglich.

# Produkt-Vorteile der WFB-Schnittstelle

**Wirtschaftlich**
Sie benötigen weniger aufwändige, teure Sonderwerkzeughalter, die Werkzeugstandzeiten verlängern sich erheblich. Die Folge ist die deutliche Minimierung Ihrer Gesamtwerkzeug-kosten. Mit dem WFB-System helfen wir Ihnen Ihre Drehmaschine künftig wirklich wirtschaftlich einzusetzen, und teure Nebenzeiten einzusparen. Das neue modulare WFB-System von W&F eröffnet Ihnen hinsichtlich der Präzision und der Flexibilität völlig neue Dimensionen in der Fertigungstechnik.

**Spannmechanismus**
Äußerst günstig durch 2 Kegelgewindestifte.

**Schnell**
Durch den Einsatz von Werkzeugen, die parallel zur Maschinenlaufzeit voreingestellt werden, reduziert sich die Maschinenrüstzeit nahezu auf Null. Teure Maschinenstillstandzeiten werden vermieden.

**Universell**
Sowohl für angetriebene als auch für feststehende Werkzeuge, sowie auf Fräsmaschinen und BAZ einsetzbar.

**Schrumpfen**
Nach vorne und nach innen möglich.

# Product advantages of WFB connection

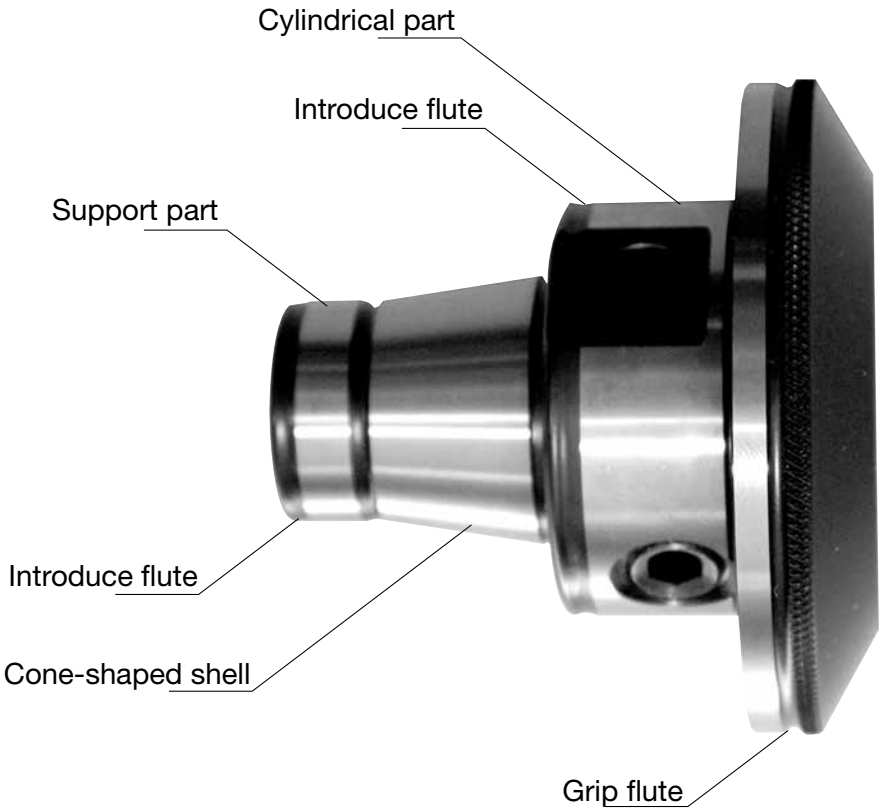


**Precise**
The taper/planned assets with cylindrical support guarantees highest precision (2µ) and completely form fit.

**Flexibel**
Collet, Weldon, schrink fit holder, etc., can be used in all master shanks. Easy and safe to handle. Collet, Weldon, schrink fit holder, etc., can be used in all master shanks. Easy and safe to handle.

**Compact**
The extrem compact construction guarantees an optimum load transmission and system rigidity. Out of it follow workpiece in higher precision and revised productivity.

**Optimized position of cutting edge**
Turnover < 10 µ

**Cleaning**
Simple because of good accessible.

# Product advantages of WFB connection

Planned assets

**Economical**
You need less expensive special tool holders and the tool life will be extended. So you get a minimization of complete costs of tools. With the WFB-system we help you to use your turning machine profitable in the future and to save expensive non-productive time. The new modular WFB-system from W&F enable you with precision and flexibility new dimensions in the production technology.

**Gripping mechanism**
Exceedingly favorable through 2 threaded taper pins.

**Quick**
Pre-setting of tools can be effected out of the machine. Setting-up time will be nearly zero. Expensive machine dead time will be avoided.

**Universal**
Applicable in driven and static tool holder, as well as on milling machine and machining center.

**Shrinking**
Forward and inward possible.

# WFB - Produktübersicht (Auszug)

WFB - Product overview
WFB - Vue d'ensemble de produit

**WFB - Aggregate**
WFB - Aggregates
WFB - Agrégats

**Axial**

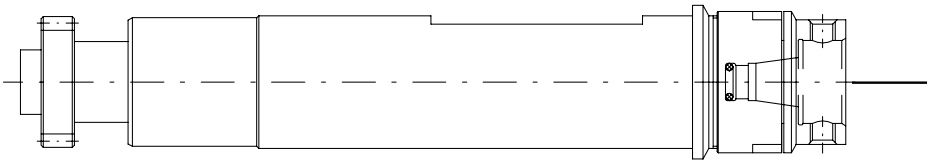

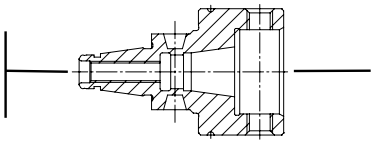

**WFB - Verlängerungen**
WFB - Extensions
WFB - Prolongations

**Radial**

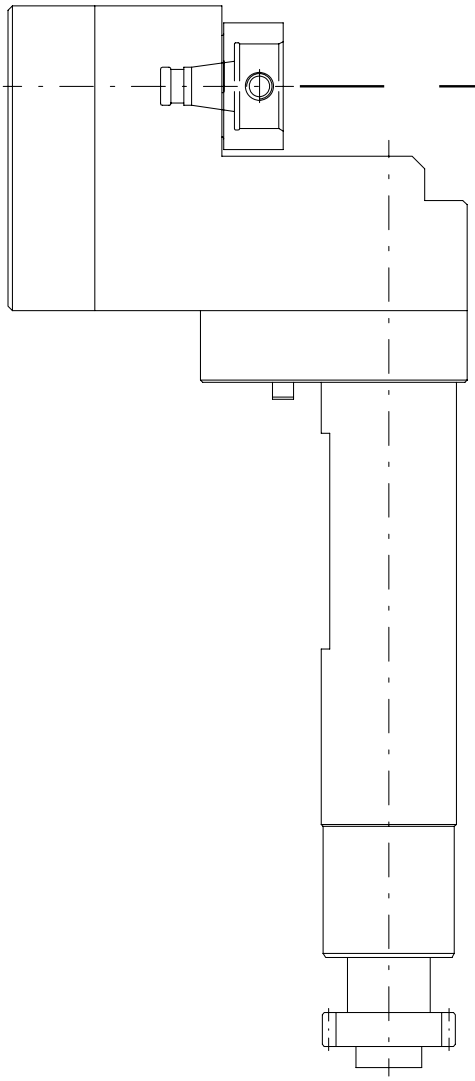

# WFB - Produktübersicht (Auszug)

WFB - Product overview
WFB - Vue d'ensemble de produit

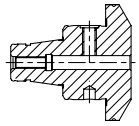

**WFB - Weldon / Whistle Notch für Zylinderschäfte DIN 1835 B / E**
WFB - Weldon / Whistle Notch for parallel shanks
WFB - Weldon / Whistle Notch pour queues cylindriques

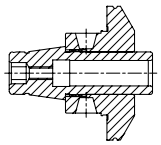

**WFB - Schrumpffutter**
WFB - Shrink fit chucks
WFB - Mandrins de frettage

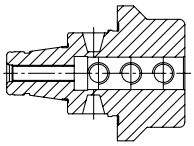

**WFB - Bohrstangenhalter**
WFB - Boring bar holder
WFB - Porte-outil pour barres d'alésage

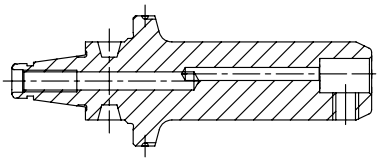

**WFB - Klemmhalter W-T HORN Supermini® mit IKZ**
WFB - Toolholder W-T HORN Supermini® with internal cooling system
WFB - Porte-outil W-T HORN Supermini® avec arrosage central

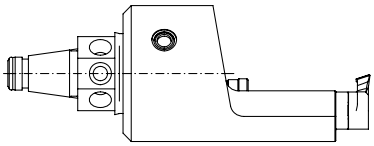

**WFB - Klemmhalter W-T HORN Mini mit IKZ**
WFB - Toolholder W-T HORN Mini with internal cooling system
WFB - Porte-outil W-T HORN Mini avec arrosage central

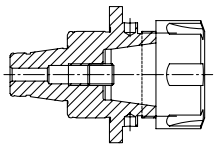

**WFB - Spannzangenfutter 8° Typ ER**
WFB - Collet chucks 8° type ER
WFB - Mandrins porte-pinces 8° type ER

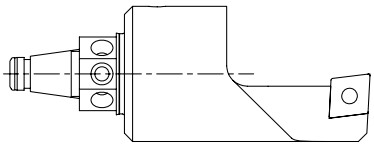

**WFB - Drehhalter W-T mit IKZ**
WFB - Turning tool holder W-T with internal cooling system
WFB - Rotatif porte-outil W-T avec arrosage central

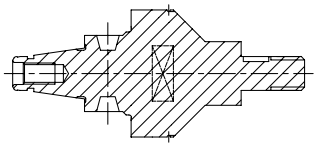

**WFB - Sägeblattaufnahmen**
WFB - Tool holders for saw blade
WFB - Mandrins pour lame de scie

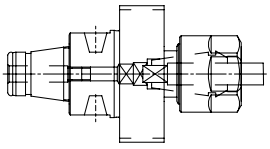

**WFB - Softsynchro® mit IKZ**
WFB - Softsynchro® with internal cooling system
WFB - Softsynchro® avec arrosage central

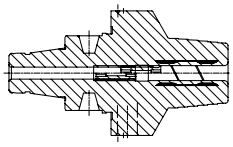

**WFB - Hydro-Dehnspannfutter**
WFB - Hydraulic expansion chuck
WFB - Mandrin hydraulique

# Modularer Wirbelkopf

Stillstandszeiten senken durch modulare Gewindewirbelköpfe

Der Ein- und Ausbau des Wirbelapparates sowie das damit verbundene Ausrichten, gehört durch den Einsatz modularer Gewindewirbeleinheiten der Vergangenheit an. Durch die hohe Rundlaufgenauigkeit der Schnittstelle und der gleichmäßigen Abnutzung der Schneidplatten, kann eine Standzeiterhöhung von bis zu 300% erreicht werden.

- Wechseln des Einsatzes: < 1 min
- Rundlaufgenauigkeit: < 3µ
- Wechselwiederholgenauigkeit: < 2µ
- Voreinstellbar außerhalb der Maschine
- Verfügbar für alle gängigen Langdrehmaschinen

Durch das Zusammenspiel von Kegel-Plananlage mit Zylindrischem Bund, erreichen wir nicht nur höchste Genauigkeit in der Schnittstelle, sondern auch ein bedienerfreundliches Wechseln der Einsätze mit lediglich drei Schrauben.

Unser Rohlingsprinzip bietet höchste Flexibilität und die Möglichkeit, Ihre benötigten bzw. bevorzugten Wendeschneidplatten zu verwenden. Die entsprechenden Plattensitze können vom Wendeplattenhersteller oder auch von Ihnen selbst in den Rohling eingebracht werden.

# Modular thread whirling head

Reduce machine downtimes by modular thread whirling heads

By the use of the modular thread whirling head, the mounting and dismounting of the unit out of the machine and the steady adjustment, are now things of the past. Though the high rotation accuracy of the interface an the even wear of the cutting edges, tool endurance can be increased up to 300%.

- change of the insert: < 1 min
- true running accuracy: < 3µ
- change accuracy: < 2µ
- pre adjustable outside of the machine
- available for common swiss-type machines

Through the interplay of cone-shaped shell and planned assets with cylindrical support, we not only reach highest preciseness in the interface it self, but also an user-friendly changing of the inserts with only three screws

Our “blanks-principle“ enables highest flexibility and the opportunity to use your needed respectively your preferred insert tips. The according insert seats can be made by the manufacturer of the insert tips, or by your self as well.

# Modulare Aggregatetechnik

## Citizen

Werkzeugtechnik
for professionals

**Katalog CI-02**

# WFB-Adapterpool

Indications for the customer

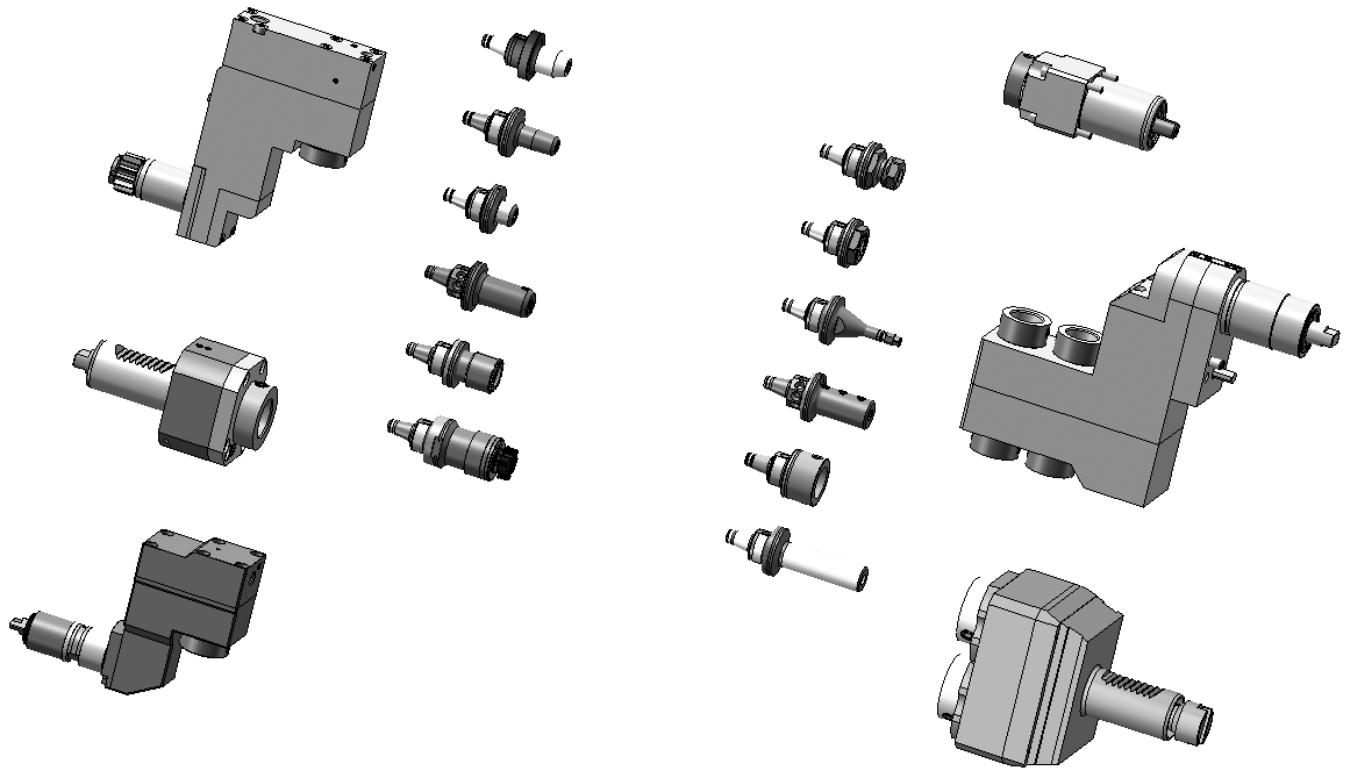

**Mit den Werkzeughaltern von W&F in statischer oder angetriebener Ausführung und dem WFB-Adaptersystem haben Sie die einzigartige Möglichkeit, für sämtliche Hersteller egal ob im Kurzdrehen, Langdrehen oder Mehrspindeldrehen ein durchgängiges modulares Werkzeugsystem einzusetzen.**

The W&F tool holders are in static or driven performance and beyond that, the WFB-adapter system offers you an unique option to use it for every machine manufacturer whether you are manufacturer producing with swiss type lathes, standard turning machines or multispindle turning machines, WFB is suitable.

# Citizen

**Axial-Bohr- und Fräskopf**
Axial drilling and milling head
Outil de perçage et de fraisage axiale

**WG 35**

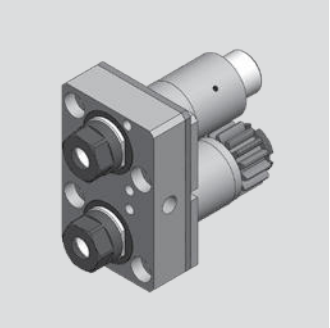

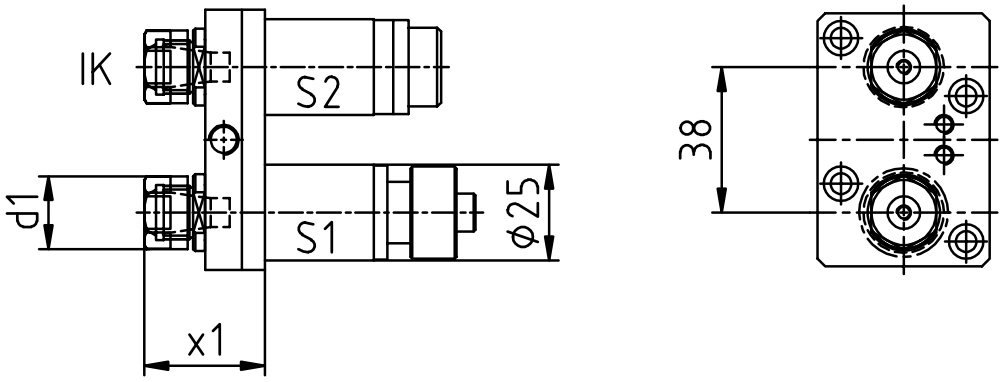


| [mm] | [mm] | Spindle<br>Broche | [Nm] | [rpm] | | Outside cooling<br>Lubrificat. ext. | Internal cooling<br>Lubrificat. cent. | [bar] | Order no.<br>Nº de Code |
|---|---|---|---|---|---|---|---|---|---|
| **d1** | **x1** | **Spindel** | **T max** | **n max** | **i** | **Aussenkühlung** | **Innenkühlung** | **p** | **Bestellnummer** |
| 19 | 36,5 | ER11 | 4* | 6.000* | 1:1* | x | | | MPU.Z25.E11.MA0.A20 |
| 19 | 36,5 | ER11 | 4* | 6.000* | 1:1* | x | x | 80 | MPU.Z25.E11.ME0.A20 |

**Passend für Maschine:**
suitable machines:
approprié pour la machine:
A20

**Ähnlich OEM Nr.**
similar to OEM no.
semblable au OEM nombre

* S1: 4 Nm/6.000 rpm/i=1:1
S2: 2 Nm/9.660 rpm/i=1:1,61

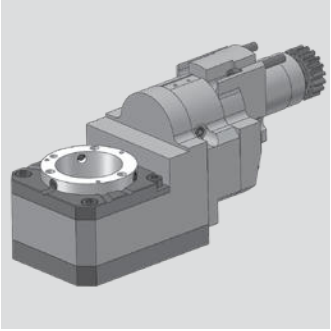

# Citizen

**Gewindewirbelapparat modular**
Thread whirling unit
Unité de tourbillonnement

**WG 35**

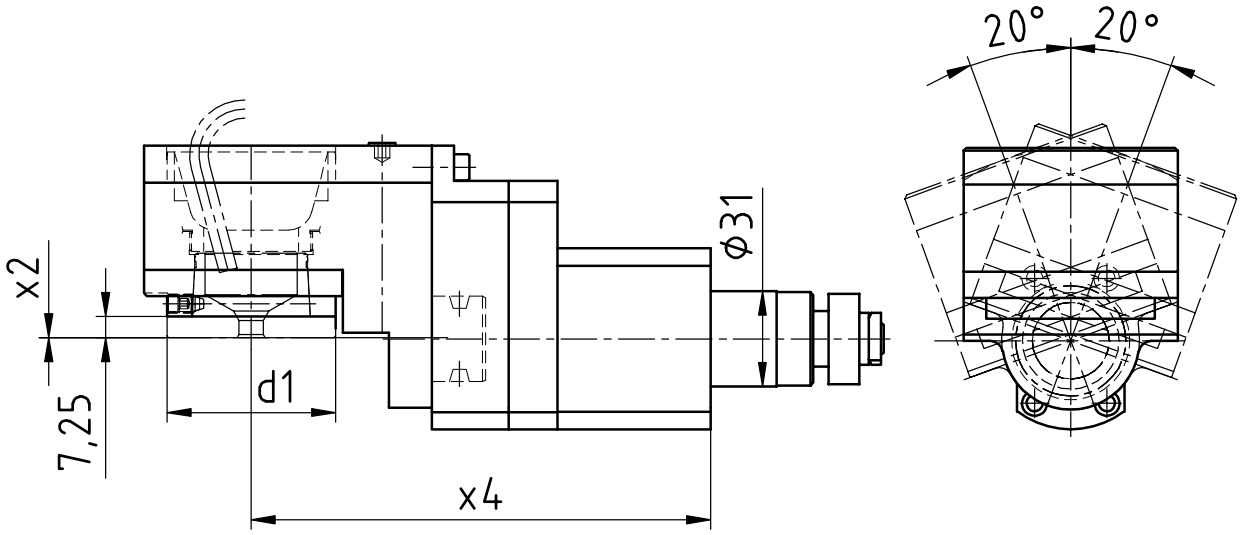


| [mm] | [mm] | [mm] | Spindle<br>Broche | [Nm] | [rpm] | | Outside cooling<br>Lubrificat. ext. | Internal cooling<br>Lubrificat. cent. | [bar] | Order no.<br>Nº de Code |
|---|---|---|---|---|---|---|---|---|---|---|
| **d1** | **x2** | **x4** | **Spindel** | **T max** | **n max** | **i** | **Aussenkühlung** | **Innenkühlung** | **p** | **Bestellnummer** |
| 54 | 0 | 150 | WFW 50 | 16 | 6.000 | 1:1 | | | | MPU.LSW.101.M0800.A20 |

| | |
|---|---|
| **Passend für Maschine:**<br>suitable machines:<br>approprié pour la machine: | A20 |

| | |
|---|---|
| **Ähnlich OEM Nr.**<br>similar to OEM no.<br>semblable au OEM nombre | |

# Citizen

**Axial-Bohr- und Fräskopf**
Axial drilling and milling head
Outil de perçage et de fraisage axiale

**WG 35**

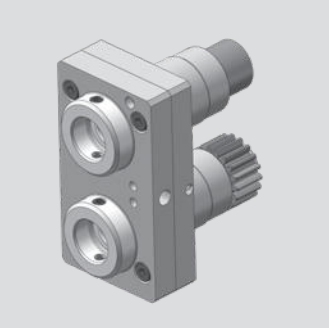

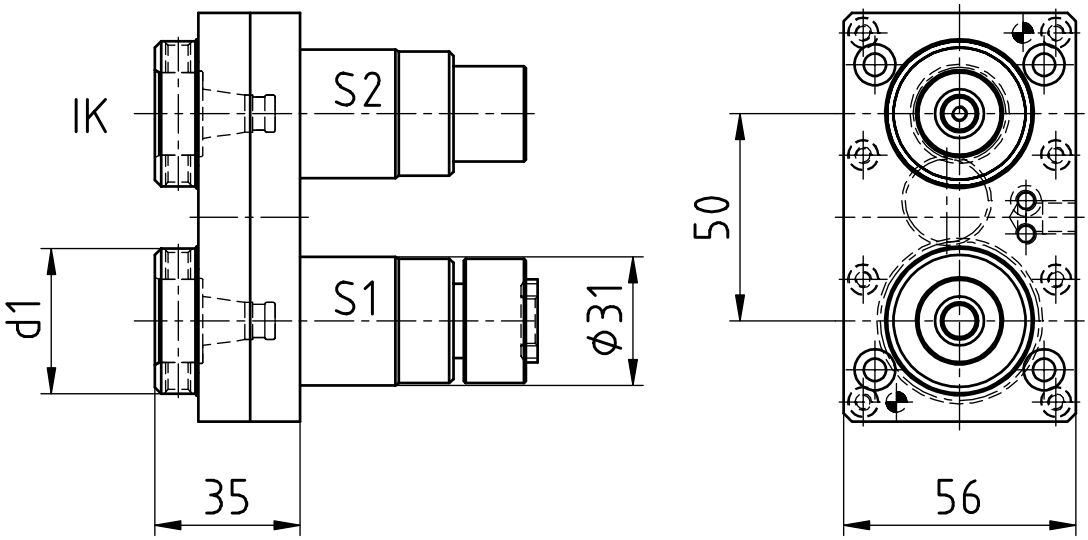


| [mm] | [mm] | Spindle<br>Broche | [Nm] | [rpm] | | Outside cooling<br>Lubrificat. ext. | Internal cooling<br>Lubrificat. cent. | [bar] | Order no.<br>Nº de Code |
|---|---|---|---|---|---|---|---|---|---|
| **d1** | **x1** | **Spindel** | **T max** | **n max** | **i** | **Aussenkühlung** | **Innenkühlung** | **p** | **Bestellnummer** |
| 35 | 35 | WFB 20-12 | 6* | 6.000* | 1:1* | x | | | MPU.Z31.B20.MA0.A32 |
| 35 | 35 | WFB 20-12 | 6* | 6.000* | 1:1* | x | x | 80 | MPU.Z31.B20.ME0.A32 |

**Passend für Maschine:**
suitable machines:
approprié pour la machine:
A32

**Ähnlich OEM Nr.**
similar to OEM no.
semblable au OEM nombre

* S1: 6 Nm/6.000 rpm/i=1:1
S2: 3 Nm/10.260 rpm/i=1:1,71

# Citizen

**Axial-Bohr- und Fräskopf**
Axial drilling and milling head
Outil de perçage et de fraisage axiale

**WG 35**

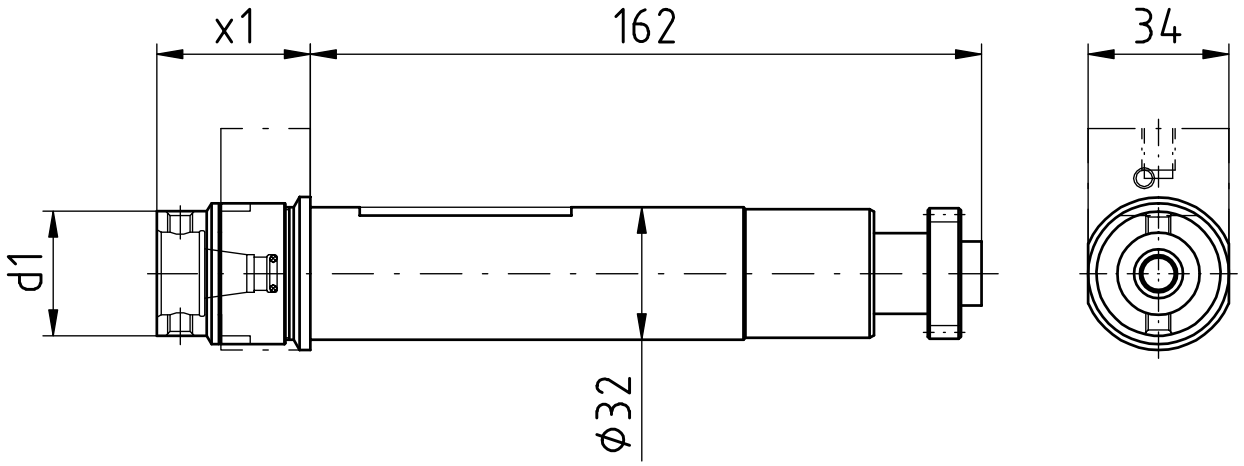


| [mm] | [mm] | Spindle<br>Broche | [Nm] | [rpm] | | Outside cooling<br>Lubrificat. ext. | Internal cooling<br>Lubrificat. cent. | [bar] | Order no.<br>Nº de Code |
|---|---|---|---|---|---|---|---|---|---|
| **d1** | **x1** | **Spindel** | **T max** | **n max** | **i** | **Aussenkühlung** | **Innenkühlung** | **p** | **Bestellnummer** |
| 30 | 37 | WFB 20-12 | 10 | 6.000 | 1:1 | | | | MPU.GSC.507.AA0.B20 |
| 30 | 37 | WFB 20-12 | 10 | 6.000 | 1:1 | x | x | 80 | MPU.GSC.507.AE0.B20 |

| **Passend für Maschine:**<br>suitable machines:<br>approprié pour la machine: | L20E2M8 | L20E-IX | L20X | M232-III | M332-III |
|---|---|---|---|---|---|
| | L20E2M10 | L20V | M220-III | M320-III | M332-V |
| | L20E1M12 | L20VIII | M220-V | M320-V | M32-4M5/M8 |

| **Ähnlich OEM Nr.**<br>similar to OEM no.<br>semblable au OEM nombre | GSC-1010 |
|---|---|

# Citizen

**Axial-Bohr- und Fräskopf**
Axial drilling and milling head
Outil de perçage et de fraisage axiale

**WG 35**

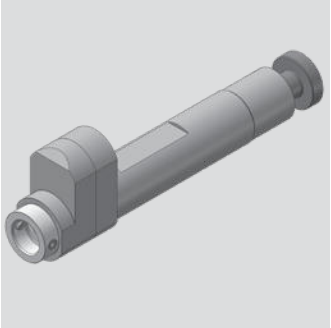

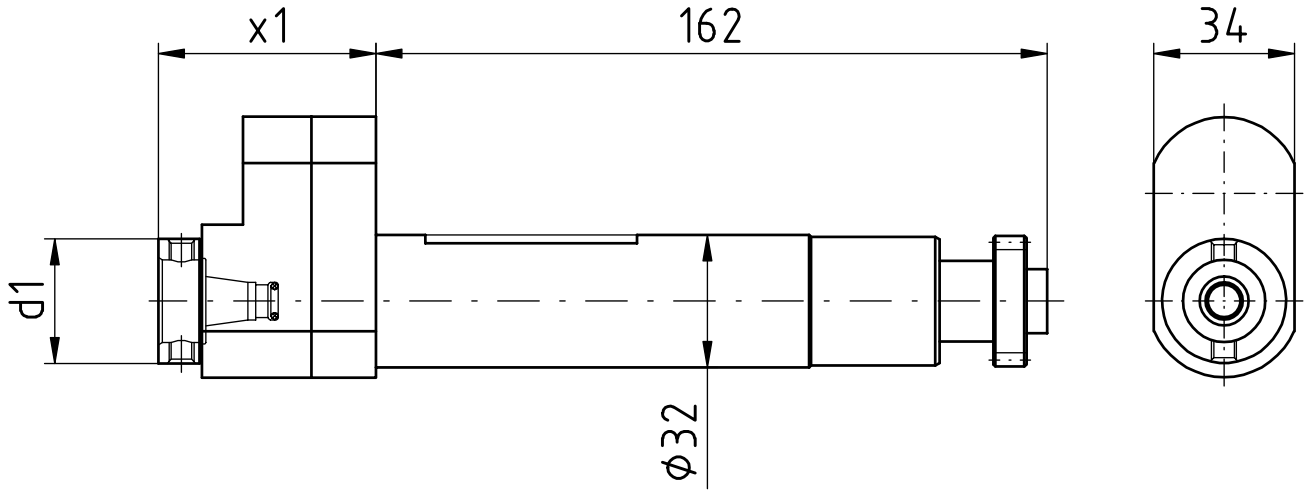


| [mm] | [mm] | Spindle<br>Broche | [Nm] | [rpm] | | Outside cooling<br>Lubrificat. ext. | Internal cooling<br>Lubrificat. cent. | [bar] | Order no.<br>Nº de Code |
|---|---|---|---|---|---|---|---|---|---|
| **d1** | **x1** | **Spindel** | **T max** | **n max** | **i** | **Aussenkühlung** | **Innenkühlung** | **p** | **Bestellnummer** |
| 30 | 52,5 | WFB 20-12 | 3 | 18.000 | 1:3 | | | | MPU.GSC.510.AA0.B20 |

| **Passend für Maschine:**<br>suitable machines:<br>approprié pour la machine: | L20E2M8<br>L20E2M10<br>L20E1M12 | L20E-IX<br>L20V<br>L20VIII | L20X<br>M220-III<br>M220-V | M232-III<br>M320-III<br>M320-V | M332-III<br>M332-V<br>M32-4M5/M8 |
|---|---|---|---|---|---|

| **Ähnlich OEM Nr.**<br>similar to OEM no.<br>semblable au OEM nombre | GSC-1010 |
|---|---|

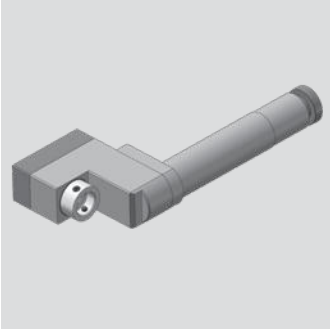

# Citizen

**Radial-Bohr- und Fräskopf**
Radial drilling and milling head
Outil de perçage et de fraisage radiale

**WG 35**

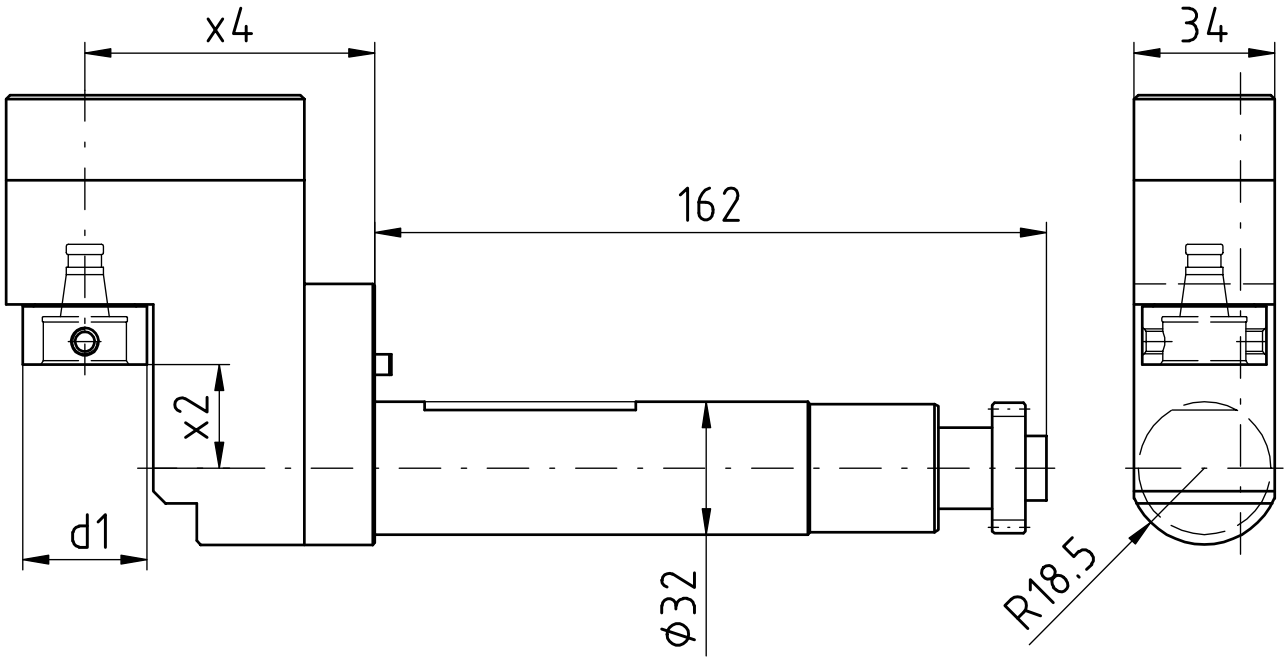


| [mm] | [mm] | [mm] | Spindle<br>Broche | [Nm] | [rpm] | | Outside cooling<br>Lubrificat. ext. | Internal cooling<br>Lubrificat. cent. | [bar] | Order no.<br>Nº de Code |
|---|---|---|---|---|---|---|---|---|---|---|
| **d1** | **x2** | **x4** | **Spindel** | **T max** | **n max** | **i** | **Aussenkühlung** | **Innenkühlung** | **p** | **Bestellnummer** |
| 30 | 25 | 70 | WFB 20-12 | 4 | 12.000 | 1:2 | | | | MPU.GSE.607.XA0.B20 |

| **Passend für Maschine:**<br>suitable machines:<br>approprié pour la machine: | L20E2M8<br>L20E2M10<br>L20E1M12 | L20E-IX<br>L20V<br>L20VIII | L20X<br>M220-III<br>M220-V | M232-III<br>M320-III<br>M320-V | M332-III<br>M332-V<br>M32-4M5/M8 |
|---|---|---|---|---|---|

| **Ähnlich OEM Nr.**<br>similar to OEM no.<br>semblable au OEM nombre | GSE-306 |
|---|---|

# Citizen

**Axial-Bohr- und Fräskopf**
Axial drilling and milling head
Outil de perçage et de fraisage axiale

**WG 35**

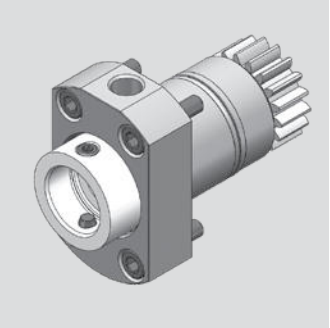

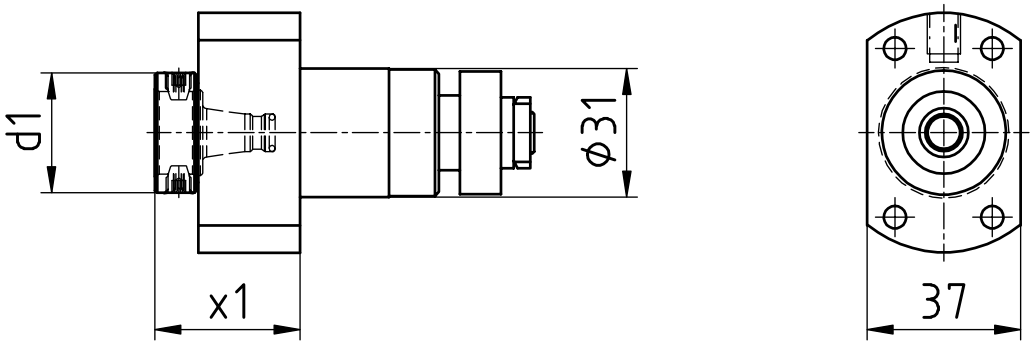


| [mm] | [mm] | Spindle<br>Broche | [Nm] | [rpm] | | Outside cooling<br>Lubrificat. ext. | Internal cooling<br>Lubrificat. cent. | [bar] | Order no.<br>Nº de Code |
|---|---|---|---|---|---|---|---|---|---|
| **d1** | **x1** | **Spindel** | **T max** | **n max** | **i** | **Aussenkühlung** | **Innenkühlung** | **p** | **Bestellnummer** |
| 30 | 35 | WFB 20-12 | 8 | 6.000 | 1:1 | | | | MPU.Z31.B20.GSC.1310 |
| 30 | 27 | WFB 20-12 | 8 | 6.000 | 1:1 | x | x | 80 | MPU.Z31.B20.GSC.1310IK |

| | | | | | |
|---|---|---|---|---|---|
| **Passend für Maschine:**<br>suitable machines:<br>approprié pour la machine: | A20-3F7N | L20E-2M8 | L32-1M12 | M232-V | M32-4M5 |
| | A232-VII | L20E-2M10 | M220-III | M320-V | M32-5M8 |
| | A32-VII | L32-1M8 | M220-V | M332-III | |
| | A320-VII | L32-1M10 | M232-III | M332-V | |

| | |
|---|---|
| **Ähnlich OEM Nr.**<br>similar to OEM no.<br>semblable au OEM nombre | GSC-1310 |

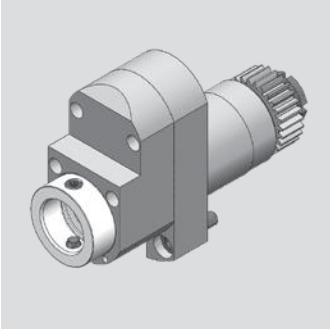

# Citizen

**Axial-Bohr- und Fräskopf**
Axial drilling and milling head
Outil de perçage et de fraisage axiale

**WG 35**

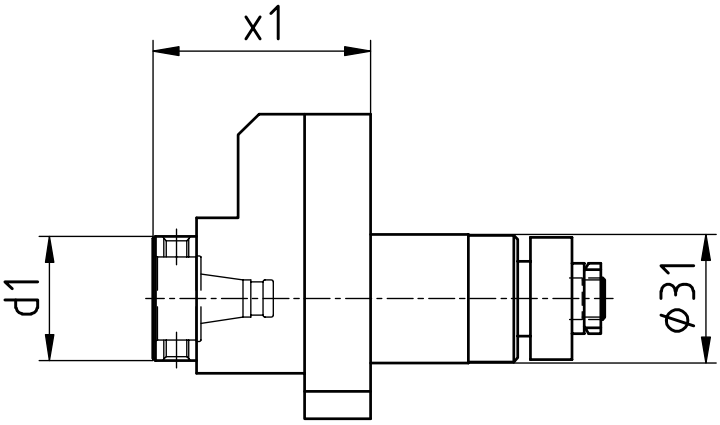


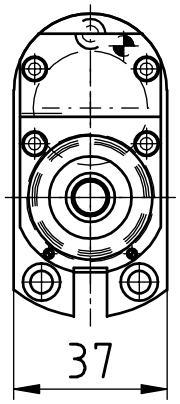


| [mm] | [mm] | Spindle<br>Broche | [Nm] | [rpm] | | Outside cooling<br>Lubrificat. ext. | Internal cooling<br>Lubrificat. cent. | [bar] | Order no.<br>Nº de Code |
|---|---|---|---|---|---|---|---|---|---|
| **d1** | **x1** | **Spindel** | **T max** | **n max** | **i** | **Aussenkühlung** | **Innenkühlung** | **p** | **Bestellnummer** |
| 30 | 52,5 | WFB 20-12 | 3 | 18.000 | 1:3 | | | | MPU.Z31.B20.BA0.1310I3 |

| **Passend für Maschine:**<br>suitable machines:<br>approprié pour la machine: | A20-3F7N | L20E-2M8 | L32-1M12 | M232-V | M32-4M5 |
|---|---|---|---|---|---|
| | A232-VII | L20E-2M10 | M220-III | M320-V | M32-5M8 |
| | A32-VII | L32-1M8 | M220-V | M332-III | |
| | A320-VII | L32-1M10 | M232-III | M332-V | |

| **Ähnlich OEM Nr.**<br>similar to OEM no.<br>semblable au OEM nombre | GSC-1310 |
|---|---|

# Citizen

**Axial-Bohr- und Fräskopf**
Axial drilling and milling head
Outil de perçage et de fraisage axiale

**WG 35**

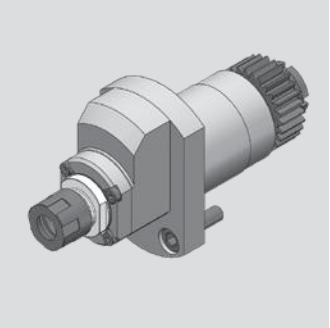

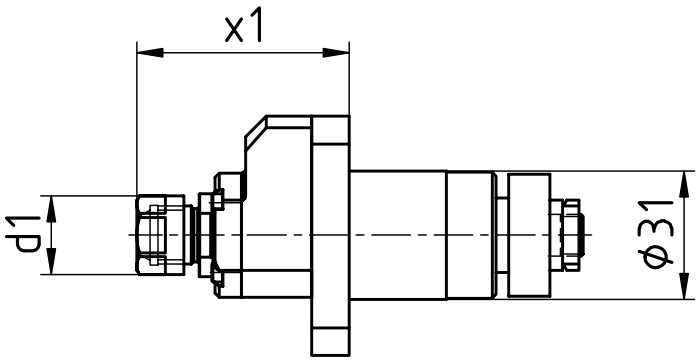


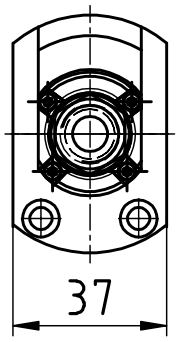


| [mm] | [mm] | Spindle<br>Broche | [Nm] | [rpm] | | Outside cooling<br>Lubrificat. ext. | Internal cooling<br>Lubrificat. cent. | [bar] | Order no.<br>Nº de Code |
|---|---|---|---|---|---|---|---|---|---|
| **d1** | **x1** | **Spindel** | **T max** | **n max** | **i** | **Aussenkühlung** | **Innenkühlung** | **p** | **Bestellnummer** |
| 19 | 51,5 | ER11 | 2 | 24.000 | 1:4 | | | | MPU.Z31.E11.BA0.1310I4 |

| | | | | | |
|---|---|---|---|---|---|
| **Passend für Maschine:**<br>suitable machines:<br>approprié pour la machine: | A20-3F7N | L20E-2M8 | L32-1M12 | M232-V | M32-4M5 |
| | A232-VII | L20E-2M10 | M220-III | M320-V | M32-5M8 |
| | A32-VII | L32-1M8 | M220-V | M332-III | |
| | A320-VII | L32-1M10 | M232-III | M332-V | |

| | |
|---|---|
| **Ähnlich OEM Nr.**<br>similar to OEM no.<br>semblable au OEM nombre | GSC-1310 |

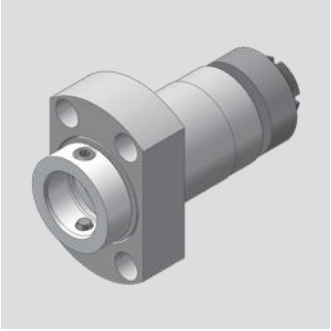

# Citizen

**Axial-Bohr- und Fräskopf**
Axial drilling and milling head
Outil de perçage et de fraisage axiale

**WG 35**

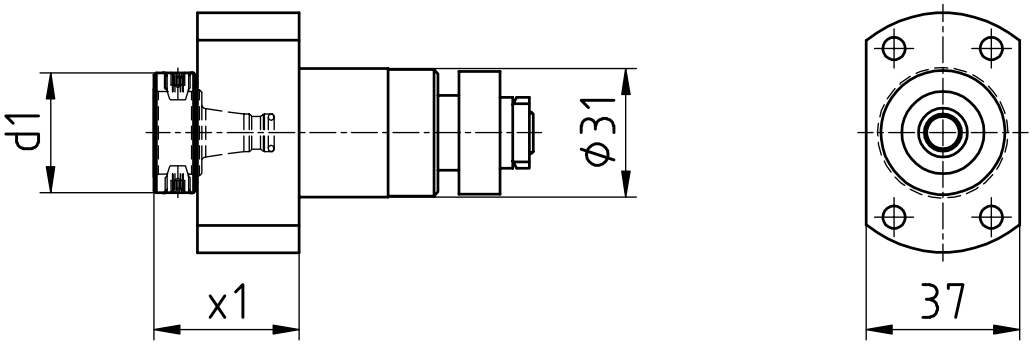


| [mm] | [mm] | Spindle<br>Broche | [Nm] | [rpm] | | Outside cooling<br>Lubrificat. ext. | Internal cooling<br>Lubrificat. cent. | [bar] | Order no.<br>Nº de Code |
|---|---|---|---|---|---|---|---|---|---|
| **d1** | **x1** | **Spindel** | **T max** | **n max** | **i** | **Aussenkühlung** | **Innenkühlung** | **p** | **Bestellnummer** |
| 30 | 35 | WFB 20-12 | 8 | 6.000 | 1:1 | | | | MPU.Z31.B20.AA0.L20V |

| | |
|---|---|
| **Passend für Maschine:**<br>suitable machines:<br>approprié pour la machine: | L20E2M8<br>L20E2M10<br>L20E-1M12<br>L20E-IX |

| | |
|---|---|
| **Ähnlich OEM Nr.**<br>similar to OEM no.<br>semblable au OEM nombre | GSC-1210 |

# Citizen

**Axial-Bohr- und Fräskopf**
Axial drilling and milling head
Outil de perçage et de fraisage axiale

**WG 35**

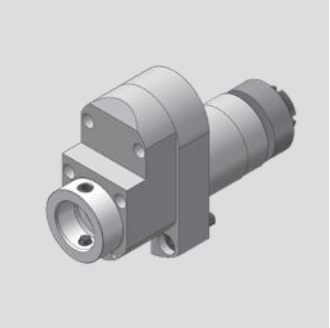

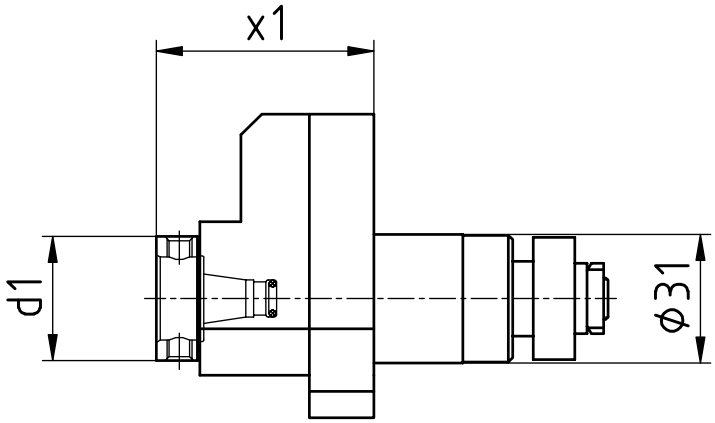


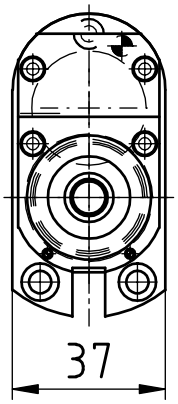


| [mm] | [mm] | Spindle<br>Broche | [Nm] | [rpm] | | Outside cooling<br>Lubrificat. ext. | Internal cooling<br>Lubrificat. cent. | [bar] | Order no.<br>Nº de Code |
|---|---|---|---|---|---|---|---|---|---|
| **d1** | **x1** | **Spindel** | **T max** | **n max** | **i** | **Aussenkühlung** | **Innenkühlung** | **p** | **Bestellnummer** |
| 30 | 52,5 | WFB 20-12 | 3 | 18.000 | 1:3 | | | | MPU.Z31.B20.BA0.L20R |

| | | |
|---|---|---|
| **Passend für Maschine:**<br>suitable machines:<br>approprié pour la machine: | L20E2M8<br>L20E2M10<br>L20E2M12 | L20E-IX |

| | |
|---|---|
| **Ähnlich OEM Nr.**<br>similar to OEM no.<br>semblable au OEM nombre | GSC-1210 |

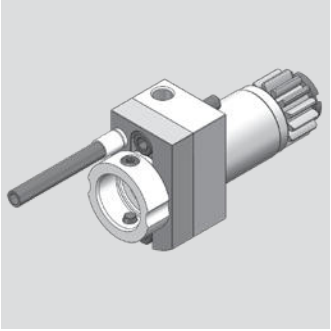

# Citizen

**Axial-Bohr- und Fräskopf**
Axial drilling and milling head
Outil de perçage et de fraisage axiale

**WG 35**

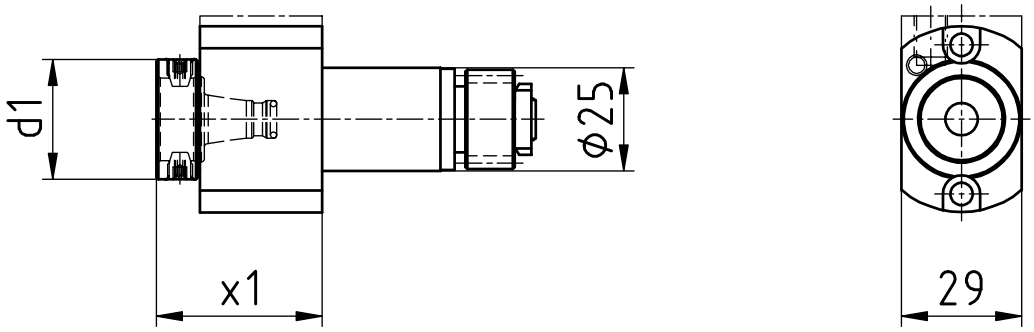


| [mm] | [mm] | Spindle<br>Broche | [Nm] | [rpm] | | Outside cooling<br>Lubrificat. ext. | Internal cooling<br>Lubrificat. cent. | [bar] | Order no.<br>Nº de Code |
|---|---|---|---|---|---|---|---|---|---|
| **d1** | **x1** | **Spindel** | **T max** | **n max** | **i** | **Aussenkühlung** | **Innenkühlung** | **p** | **Bestellnummer** |
| 29 | 40 | WFB 20-12 | 8 | 6.000 | 1:1 | | | | MPU.Z25.B20.AA0.VX |
| 29 | 26,5 | WFB 20-12 | 8 | 6.000 | 1:1 | | | | MPU.Z25.B20.AA0.L20R |
| 29 | 36,5 | WFB 20-12 | 8 | 6.000 | 1:1 | x | x | 80 | MPU.Z25.B20.AE0.L20R |

| | | | | | | | |
|---|---|---|---|---|---|---|---|
| **Passend für Maschine:**<br>suitable machines:<br>approprié pour la machine: | A20-VII | L20E-2M10 | M220-III | M320-V | M212-C | M312-V | M16-4M8 |
| | A20-3F7N | L20E-2M8 | M220-V | M332-III | M212-V | M312-VII | |
| | A320-VII | L20E-IX | M232-III | M332-V | M216-C | M316-III | |
| | L 12-1M7 | L20X | M232-V | M32-4MS | M216-V | M316-V | |
| | L20E-2M12 | L32-1M12 | M320-III | M32-4M8 | M312-III | M16-4MS | |

| | |
|---|---|
| **Ähnlich OEM Nr.**<br>similar to OEM no.<br>semblable au OEM nombre | MSC-507 |

# Citizen

**Axial Bohr- und Fräskopf**
Axial drilling and milling head
Outil de perçage et de fraisage axiale

**WG 35**

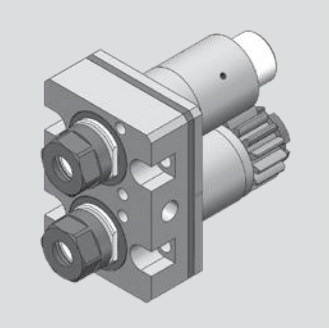

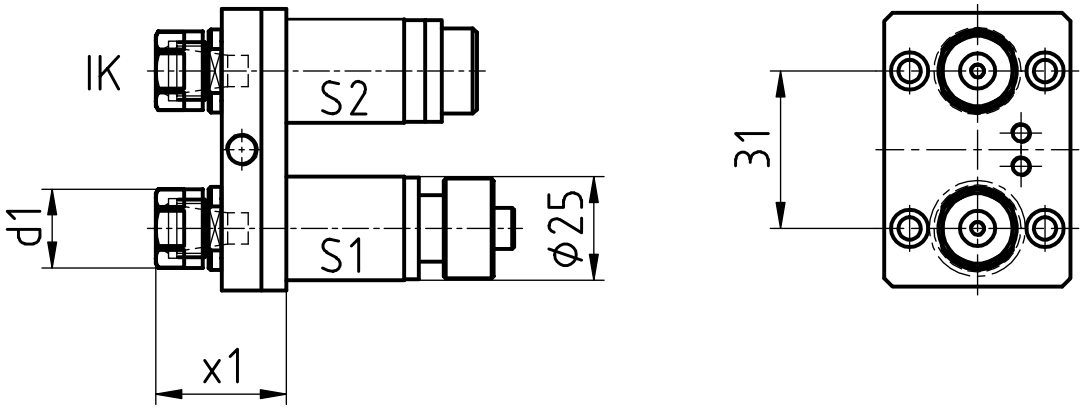


| [mm] | [mm] | Spindle<br>Broche | [Nm] | [rpm] | | Outside cooling<br>Lubrificat. ext. | Internal cooling<br>Lubrificat. cent. | [bar] | Order no.<br>Nº de Code |
|---|---|---|---|---|---|---|---|---|---|
| **d1** | **x1** | **Spindel** | **T max** | **n max** | **i** | **Aussenkühlung** | **Innenkühlung** | **p** | **Bestellnummer** |
| 19 | 31 | ER11 | 4* | 6.000* | 1:1* | x | | | MPU.Z25.E11.MA0.L20 |
| 19 | 31 | ER11 | 4* | 6.000* | 1:1* | x | x | 80 | MPU.Z25.E11.ME0.L20 |

| **Passend für Maschine:**<br>suitable machines:<br>approprié pour la machine: | L20E2M8 | L20E-IX | L20X | M232-III |
|---|---|---|---|---|
| | L20E2M10 | L20V | M220-III | |
| | L20E-1M12 | L20VIII | M220-V | |

**Ähnlich OEM Nr.**
similar to OEM no.
semblable au OEM nombre

* S1: 4 Nm/6.000 rpm/i=1:1
S2: 2 Nm/9.660 rpm/i=1:1,61

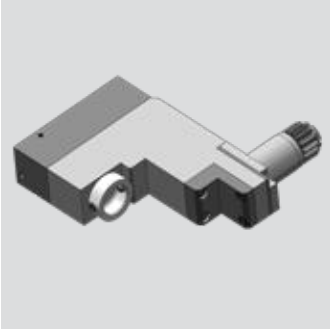

# Citizen

**Radial-Bohr- und Fräskopf**
Radial drilling and milling head
Outil de perçage et de fraisage radiale

**WG 35**

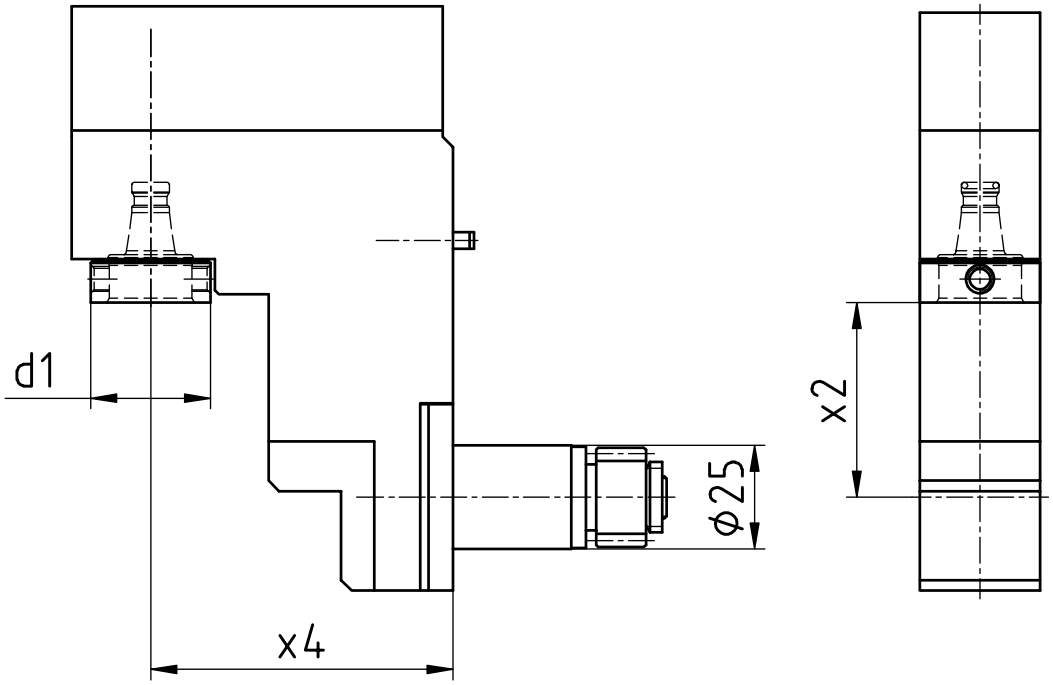


| [mm] | [mm] | [mm] | Spindle<br>Broche | [Nm] | [rpm] | | Outside cooling<br>Lubrificat. ext. | Internal cooling<br>Lubrificat. cent. | [bar] | Order no.<br>Nº de Code |
|---|---|---|---|---|---|---|---|---|---|---|
| **d1** | **x2** | **x4** | **Spindel** | **T max** | **n max** | **i** | **Aussenkühlung** | **Innenkühlung** | **p** | **Bestellnummer** |
| 29 | 47 | 73 | WFB 20-12 | 8 | 6.000 | 1:1 | | | | MPU.Z25.B20.VA0.L20R |

| | | |
|---|---|---|
| **Passend für Maschine:**<br>suitable machines:<br>approprié pour la machine: | L20E2M8<br>L20E2M10<br>L20E-1M12 | L20E-IX<br>L20X<br>L20XII |

| | |
|---|---|
| **Ähnlich OEM Nr.**<br>similar to OEM no.<br>semblable au OEM nombre | GSC-1507 |

# Citizen

**Gewindewirbelapparat modular**
Thread whirling unit
Unité de tourbillonnement

**WG 35**

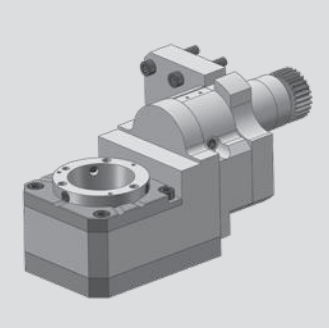

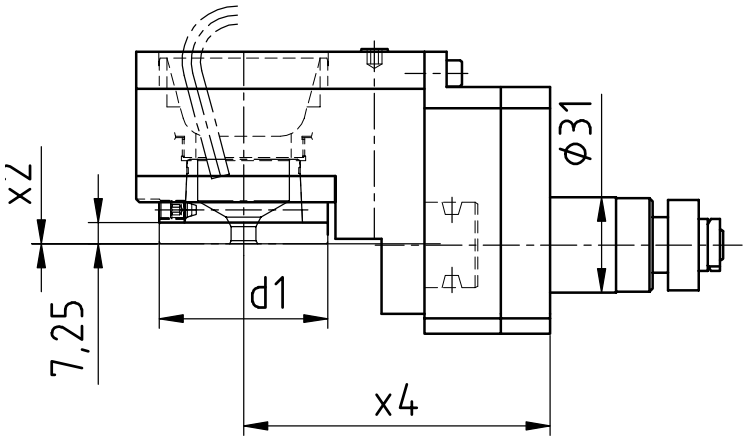


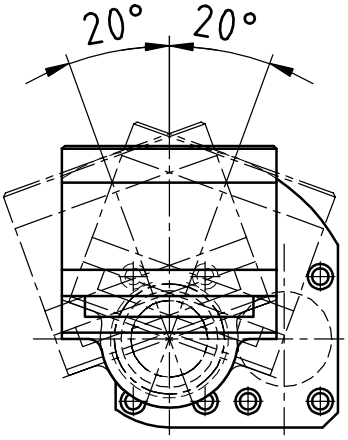


| [mm] | [mm] | [mm] | Spindle<br>Broche | [Nm] | [rpm] | | Outside cooling<br>Lubrificat. ext. | Internal cooling<br>Lubrificat. cent. | [bar] | Order no.<br>Nº de Code |
|---|---|---|---|---|---|---|---|---|---|---|
| **d1** | **x2** | **x4** | **Spindel** | **T max** | **n max** | **i** | **Aussenkühlung** | **Innenkühlung** | **p** | **Bestellnummer** |
| 54 | 0 | 100 | WFW 50 | 16 | 6.000 | 1:1 | x | | | MPU.LSW.101.M0800.L20N |

| **Passend für Maschine:**<br>suitable machines:<br>approprié pour la machine: | L20E-2M8<br>L20E-2M10<br>L20E-2M12 | L20E-IX<br>L32-1M8<br>L32-1M10 | L32-1M12 |
|---|---|---|---|

| **Ähnlich OEM Nr.**<br>similar to OEM no.<br>semblable au OEM nombre |
|---|

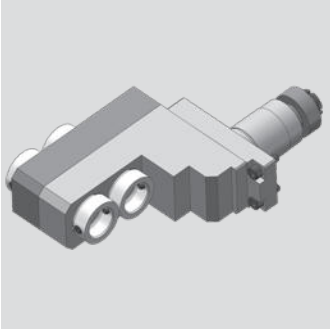

# Citizen

**Radial-Bohr- und Fräskopf**
Radial drilling and milling head
Outil de perçage et de fraisage radiale

**WG 35**

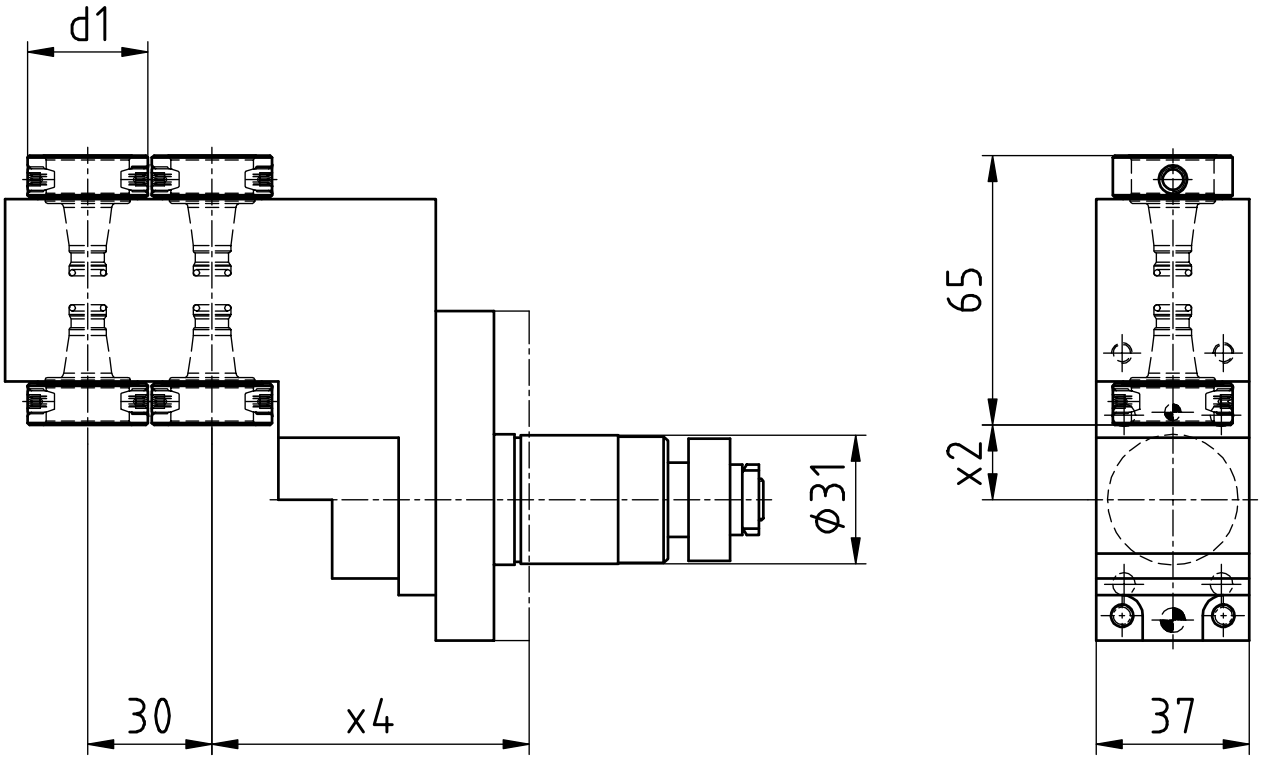


| [mm] | [mm] | [mm] | Spindle<br>Broche | [Nm] | [rpm] | | Outside cooling<br>Lubrificat. ext. | Internal cooling<br>Lubrificat. cent. | [bar] | Order no.<br>Nº de Code |
|---|---|---|---|---|---|---|---|---|---|---|
| **d1** | **x2** | **x4** | **Spindel** | **T max** | **n max** | **i** | **Aussenkühlung** | **Innenkühlung** | **p** | **Bestellnummer** |
| 29 | 18 | 76,5 | WFB 20-12 | 3 | 8.880 | 1:1,48 | | | | MPU.Z31.B20.4A0.3107 |

| | | | |
|---|---|---|---|
| **Passend für Maschine:**<br>suitable machines:<br>approprié pour la machine: | L20E2M8<br>L20E2M10<br>L20E-1M12 | L20E-IX<br>L20V<br>L20VII | L20VIII<br>L20X |

| | |
|---|---|
| **Ähnlich OEM Nr.**<br>similar to OEM no.<br>semblable au OEM nombre | GSE-3107 |

# Citizen

**Radial-Bohr- und Fräskopf**
Radial drilling and milling head
Outil de perçage et de fraisage radiale

**WG 35**

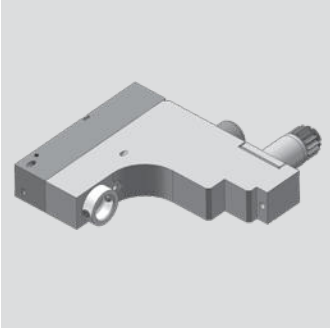

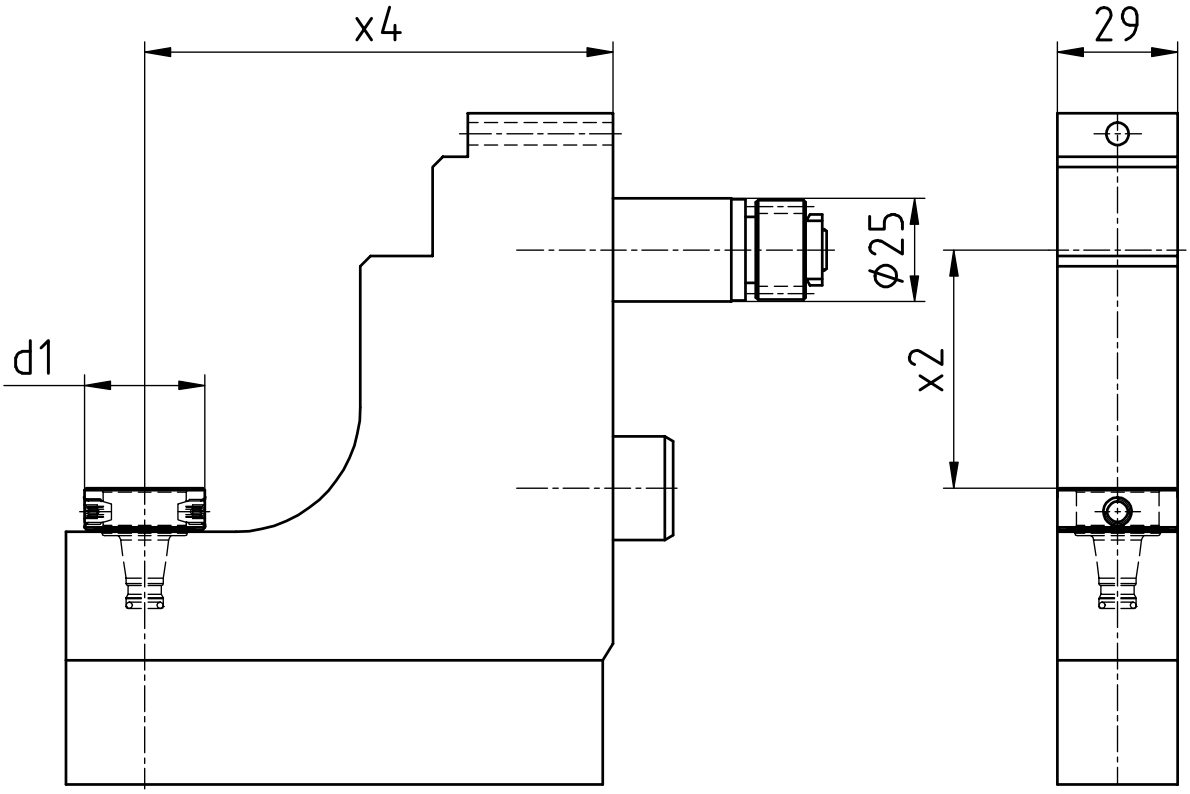


| [mm] | [mm] | [mm] | Spindle<br>Broche | [Nm] | [rpm] | | Outside cooling<br>Lubrificat. ext. | Internal cooling<br>Lubrificat. cent. | [bar] | Order no.<br>Nº de Code |
|---|---|---|---|---|---|---|---|---|---|---|
| **d1** | **x2** | **x4** | **Spindel** | **T max** | **n max** | **i** | **Aussenkühlung** | **Innenkühlung** | **p** | **Bestellnummer** |
| 29 | 57,5 | 113 | WFB 20-12 | 8 | 6.000 | 1:1 | x | | | MPU.Z25.B20.VA0.L20V |

| | |
|---|---|
| **Passend für Maschine:**<br>suitable machines:<br>approprié pour la machine: | L20X |

| | |
|---|---|
| **Ähnlich OEM Nr.**<br>similar to OEM no.<br>semblable au OEM nombre | GSC-1407 |

# Citizen

**Axial-Bohr- und Fräskopf**
Axial drilling and milling head
Outil de perçage et de fraisage axiale

**WG 35**

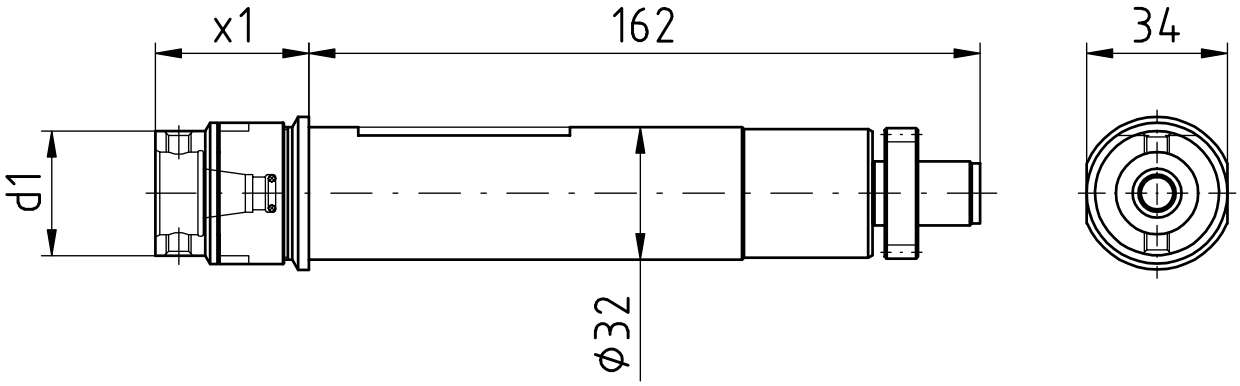


| [mm] | [mm] | Spindle<br>Broche | [Nm] | [rpm] | | Outside cooling<br>Lubrificat. ext. | Internal cooling<br>Lubrificat. cent. | [bar] | Order no.<br>Nº de Code |
|---|---|---|---|---|---|---|---|---|---|
| **d1** | **x1** | **Spindel** | **T max** | **n max** | **i** | **Aussenkühlung** | **Innenkühlung** | **p** | **Bestellnummer** |
| 30 | 37 | WFB 20-12 | 10 | 6.000 | 1:1 | | | | MPU.GSC.310.AA0.B20 |

| | |
|---|---|
| **Passend für Maschine:**<br>suitable machines:<br>approprié pour la machine: | L25<br>L32 |

| | |
|---|---|
| **Ähnlich OEM Nr.**<br>similar to OEM no.<br>semblable au OEM nombre | |

# Citizen

**Axial-Bohr- und Fräskopf**
Axial drilling and milling head
Outil de perçage et de fraisage axiale

**WG 35**

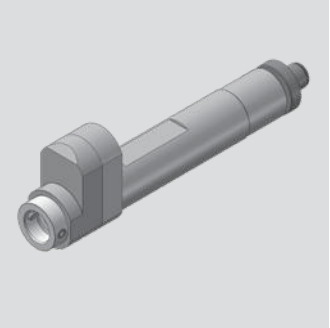

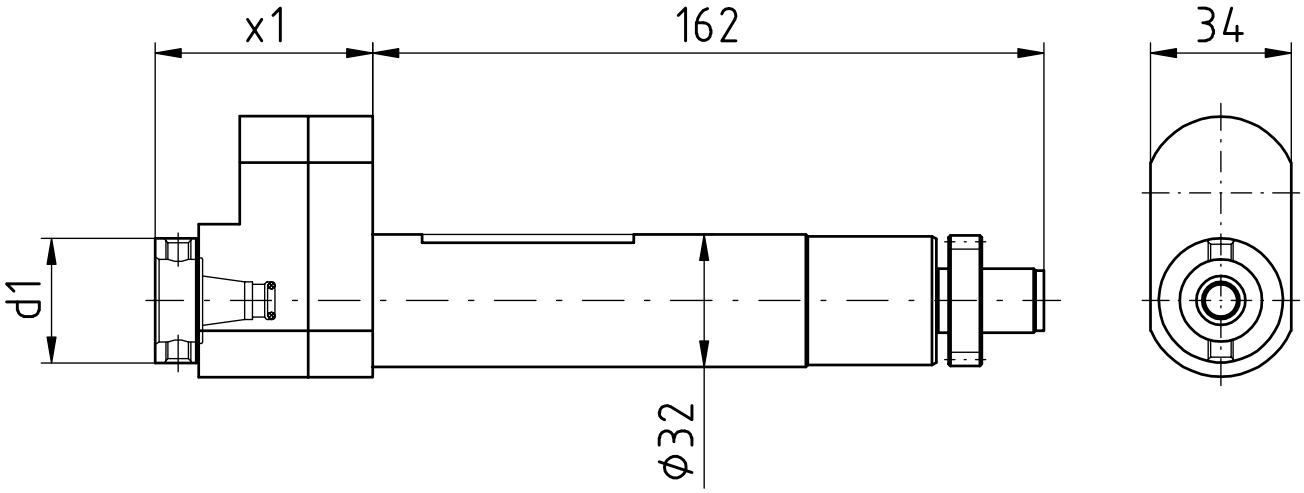


| [mm] | [mm] | Spindle<br>Broche | [Nm] | [rpm] | | Outside cooling<br>Lubrificat. ext. | Internal cooling<br>Lubrificat. cent. | [bar] | Order no.<br>Nº de Code |
|---|---|---|---|---|---|---|---|---|---|
| **d1** | **x1** | **Spindel** | **T max** | **n max** | **i** | **Aussenkühlung** | **Innenkühlung** | **p** | **Bestellnummer** |
| 30 | 52,5 | WFB 20-12 | 3 | 18.000 | 1:3 | | | | MPU.GSC.610.AA0.B20 |

| | |
|---|---|
| **Passend für Maschine:**<br>suitable machines:<br>approprié pour la machine: | L25<br>L32 |

| | |
|---|---|
| **Ähnlich OEM Nr.**<br>similar to OEM no.<br>semblable au OEM nombre | |

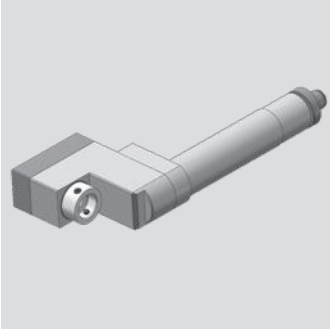

# Citizen

**Radial-Bohr- und Fräskopf**
Radial drilling and milling head
Outil de perçage et de fraisage radiale

**WG 35**

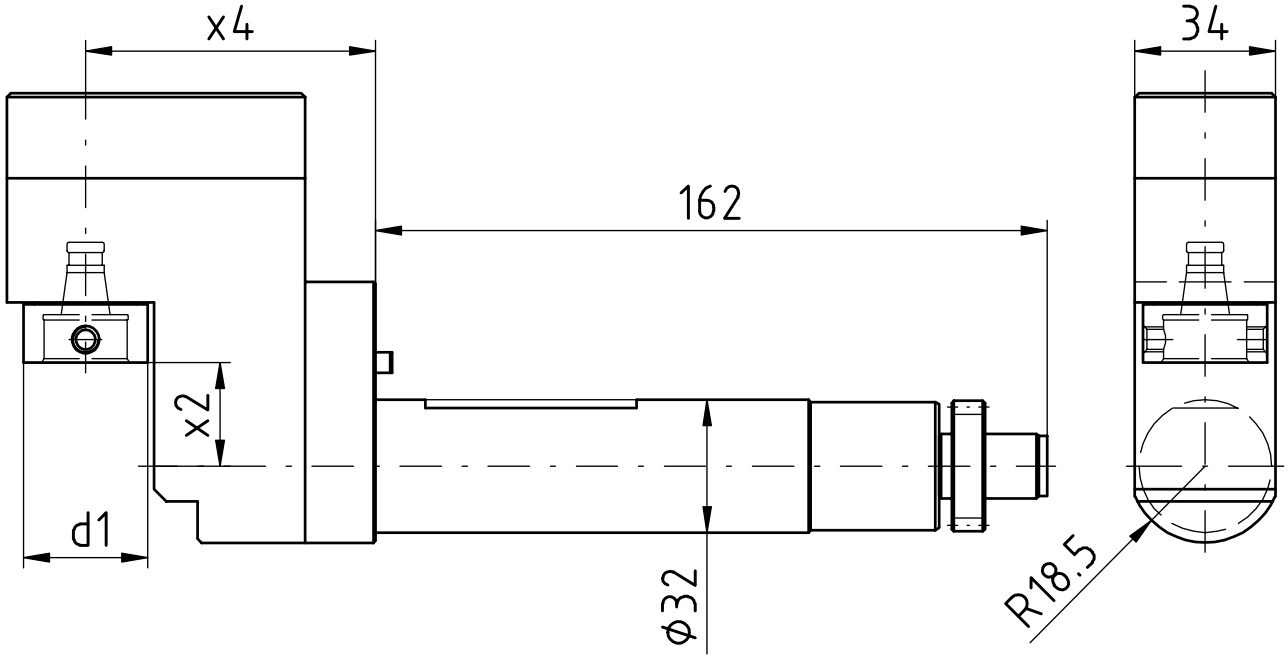


| [mm] | [mm] | [mm] | Spindle<br>Broche | [Nm] | [rpm] | | Outside cooling<br>Lubrificat. ext. | Internal cooling<br>Lubrificat. cent. | [bar] | Order no.<br>Nº de Code |
|---|---|---|---|---|---|---|---|---|---|---|
| **d1** | **x2** | **x4** | **Spindel** | **T max** | **n max** | **i** | **Aussenkühlung** | **Innenkühlung** | **p** | **Bestellnummer** |
| 30 | 25 | 70 | WFB 20-12 | 4 | 12.000 | 1:2 | | | | MPU.GSE.307.XA0.B20 |

| | |
|---|---|
| **Passend für Maschine:**<br>suitable machines:<br>approprié pour la machine: | L25<br>L32 |

| | |
|---|---|
| **Ähnlich OEM Nr.**<br>similar to OEM no.<br>semblable au OEM nombre | |

# Citizen

**Axial-Bohr- und Fräskopf**
Axial drilling and milling head
Outil de perçage et de fraisage axiale

**WG 35**

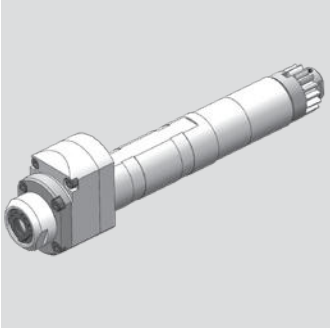

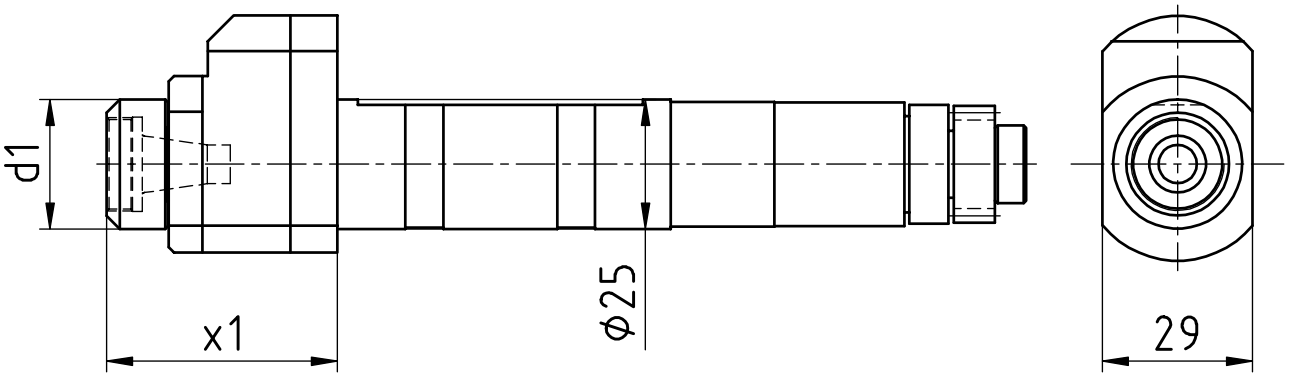


| [mm] | [mm] | Spindle<br>Broche | [Nm] | [rpm] | | Outside cooling<br>Lubrificat. ext. | Internal cooling<br>Lubrificat. cent. | [bar] | Order no.<br>Nº de Code |
|---|---|---|---|---|---|---|---|---|---|
| **d1** | **x1** | **Spindel** | **T max** | **n max** | **i** | **Aussenkühlung** | **Innenkühlung** | **p** | **Bestellnummer** |
| 25 | 44,5 | ER11 | 3 | 24.000 | 1:3 | | | | MPU.GSC.607.BA0.E11 |

| | | | |
|---|---|---|---|
| **Passend für Maschine:**<br>suitable machines:<br>approprié pour la machine: | M212-C<br>M212-V<br>M216-C | M216-V<br>M312-III<br>M312-V | M316-III<br>M316-V |

| | |
|---|---|
| **Ähnlich OEM Nr.**<br>similar to OEM no.<br>semblable au OEM nombre | GSC-607 |

# Citizen

**Axial-Bohr- und Fräskopf**
Axial drilling and milling head
Outil de perçage et de fraisage axiale

**WG 35**

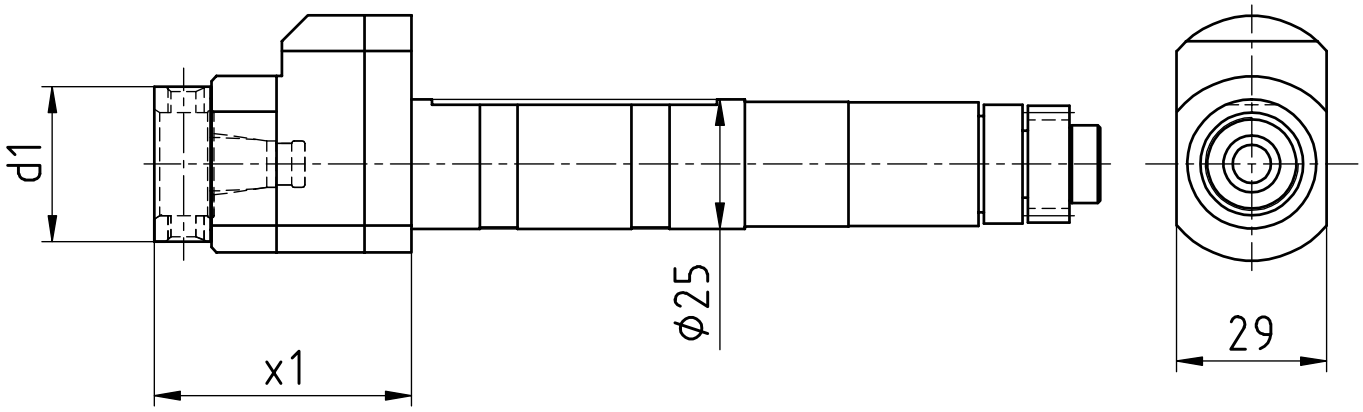


| [mm] | [mm] | Spindle<br>Broche | [Nm] | [rpm] | | Outside cooling<br>Lubrificat. ext. | Internal cooling<br>Lubrificat. cent. | [bar] | Order no.<br>Nº de Code |
|---|---|---|---|---|---|---|---|---|---|
| **d1** | **x1** | **Spindel** | **T max** | **n max** | **i** | **Aussenkühlung** | **Innenkühlung** | **p** | **Bestellnummer** |
| 29 | 49,6 | WFB 20-12 | 3 | 24.000 | 1:3 | | | | MPU.GSC.607.BA0.B20 |

| **Passend für Maschine:**<br>suitable machines:<br>approprié pour la machine: | M212-C<br>M212-V<br>M216-C | M216-V<br>M312-III<br>M312-V | M316-III<br>M316-V |
|---|---|---|---|

| **Ähnlich OEM Nr.**<br>similar to OEM no.<br>semblable au OEM nombre | GSC-607 |
|---|---|

# Citizen

**Axial-Bohr- und Fräskopf**
Axial drilling and milling head
Outil de perçage et de fraisage axiale

**WG 35**

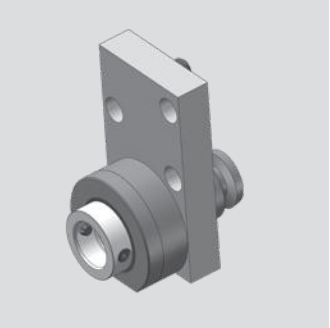

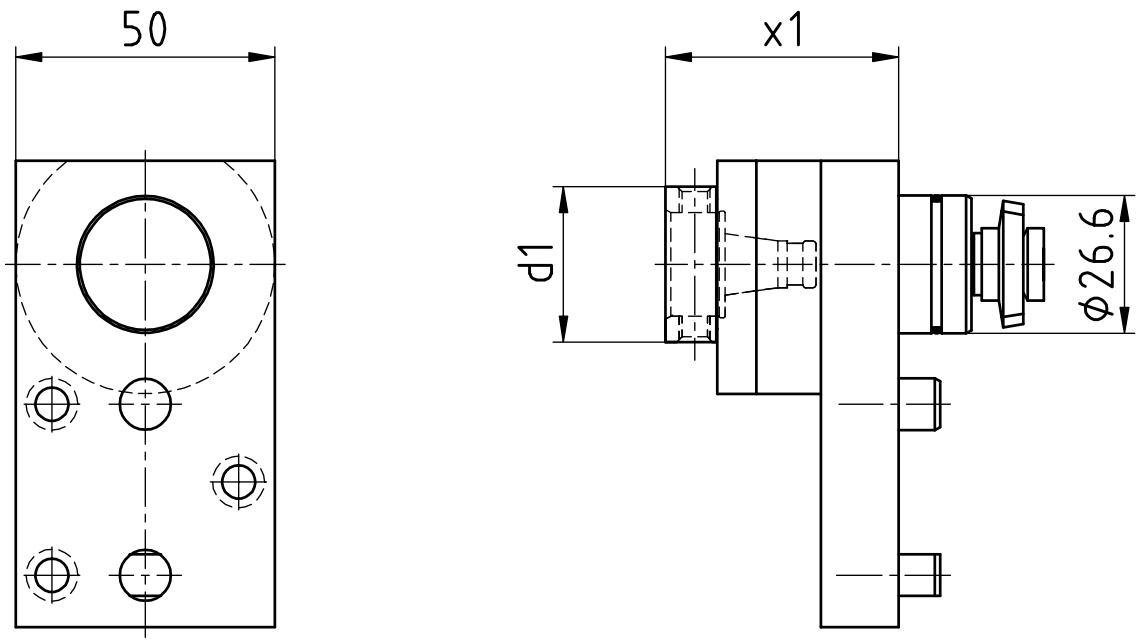


| [mm] | [mm] | Spindle<br>Broche | [Nm] | [rpm] | | Outside cooling<br>Lubrificat. ext. | Internal cooling<br>Lubrificat. cent. | [bar] | Order no.<br>Nº de Code |
|---|---|---|---|---|---|---|---|---|---|
| **d1** | **x1** | **Spindel** | **T max** | **n max** | **i** | **Aussenkühlung** | **Innenkühlung** | **p** | **Bestellnummer** |
| 30 | 45 | WFB 20-12 | 10 | 6.000 | 1:1 | | | | MPU.MSC.106.AA0.B20 |

| **Passend für Maschine:**<br>suitable machines:<br>approprié pour la machine: | M212-C<br>M212-V<br>M216-C | M216-V<br>M312-III<br>M312-V | M316-III<br>M316-V<br>M16-4MS | M16-4M8 |
|---|---|---|---|---|

| **Ähnlich OEM Nr.**<br>similar to OEM no.<br>semblable au OEM nombre | MSC-106 |
|---|---|

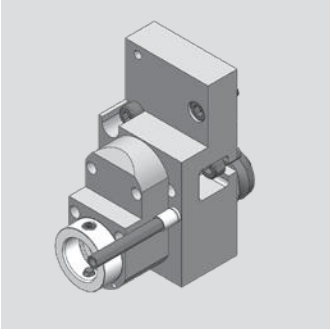

# Citizen

**Axial-Bohr- und Fräskopf**
Axial drilling and milling head
Outil de perçage et de fraisage axiale

**WG 35**

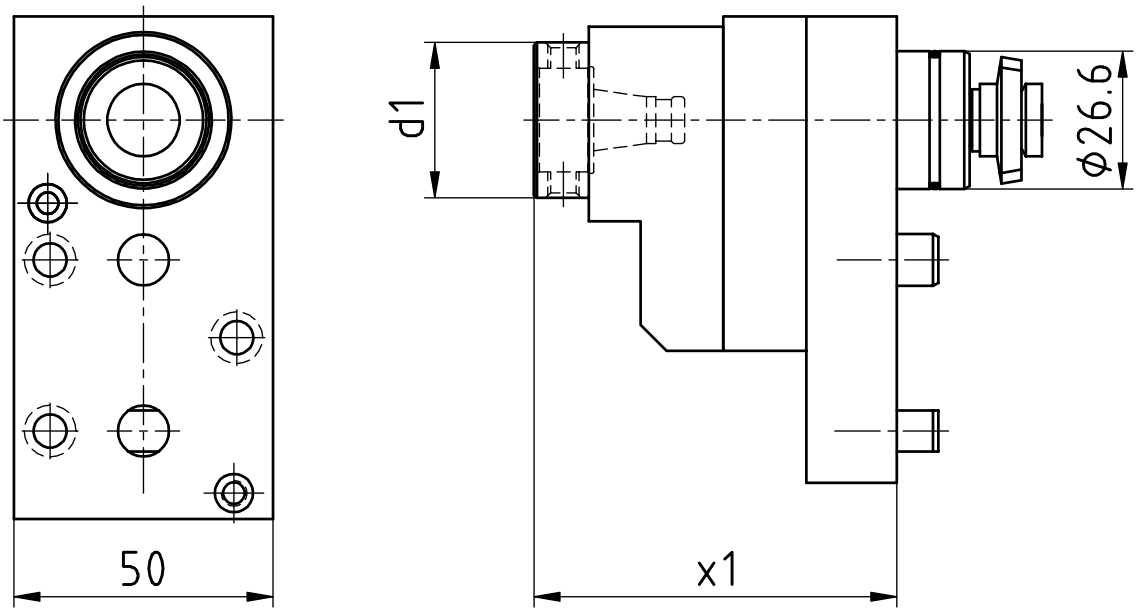


| [mm] | [mm] | Spindle<br>Broche | [Nm] | [rpm] | | Outside cooling<br>Lubrificat. ext. | Internal cooling<br>Lubrificat. cent. | [bar] | Order no.<br>Nº de Code |
|---|---|---|---|---|---|---|---|---|---|
| **d1** | **x1** | **Spindel** | **T max** | **n max** | **i** | **Aussenkühlung** | **Innenkühlung** | **p** | **Bestellnummer** |
| 30 | 70 | WFB 20-12 | 3 | 18.000 | 1:3 | | | | MPU.MSC.106.BA0.B20 |

| **Passend für Maschine:**<br>suitable machines:<br>approprié pour la machine: | M212-C<br>M212-V<br>M216-C | M216-V<br>M312-III<br>M312-V | M316-III<br>M316-V<br>M16-4MS | M16-4MB |
|---|---|---|---|---|

| **Ähnlich OEM Nr.**<br>similar to OEM no.<br>semblable au OEM nombre | MSC-106 |
|---|---|

# Citizen

**Radial-Bohr- und Fräskopf**
Radial drilling and milling head
Outil de perçage et de fraisage radiale

**WG 35**

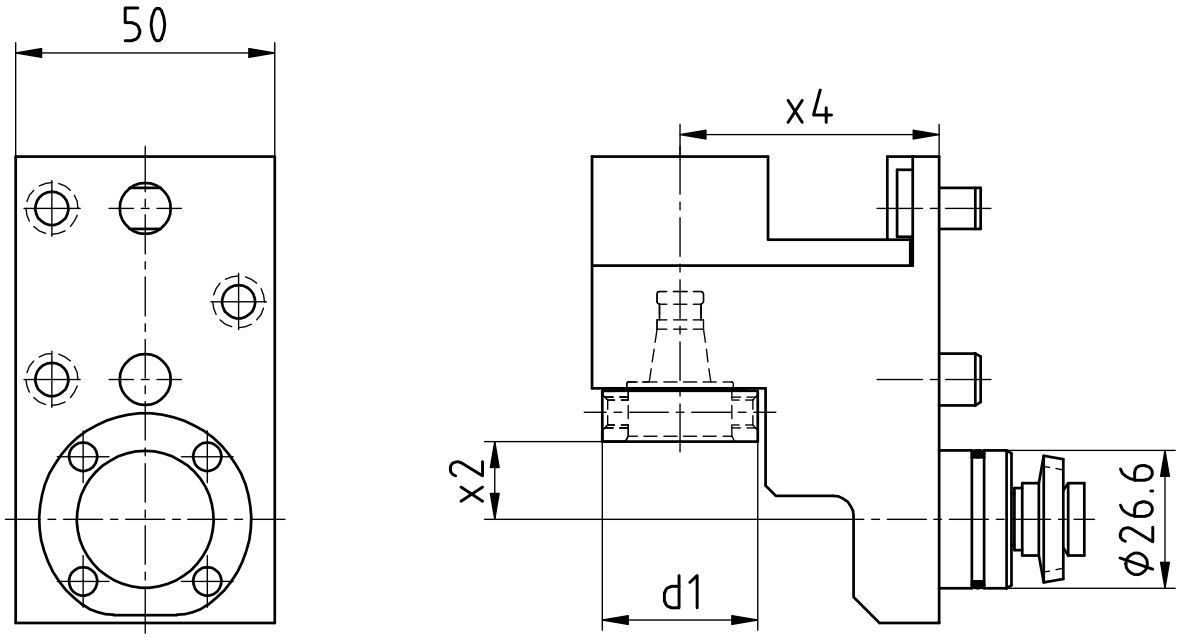


| [mm] | [mm] | [mm] | Spindle<br>Broche | [Nm] | [rpm] | | Outside cooling<br>Lubrificat. ext. | Internal cooling<br>Lubrificat. cent. | [bar] | Order no.<br>Nº de Code |
|---|---|---|---|---|---|---|---|---|---|---|
| **d1** | **x2** | **x4** | **Spindel** | **T max** | **n max** | **i** | **Aussenkühlung** | **Innenkühlung** | **p** | **Bestellnummer** |
| 30 | 15 | 50 | WFB 20-12 | 6 | 12.000 | 1:2 | | | | MPU.MSE.106.XA0.B20 |

| | | | | |
|---|---|---|---|---|
| **Passend für Maschine:**<br>suitable machines:<br>approprié pour la machine: | M212-C<br>M212-V<br>M216-C | M216-V<br>M312-III<br>M312-V | M316-III<br>M316-V<br>M16-4M5 | M16-4M8 |

| | |
|---|---|
| **Ähnlich OEM Nr.**<br>similar to OEM no.<br>semblable au OEM nombre | MSE-106 |

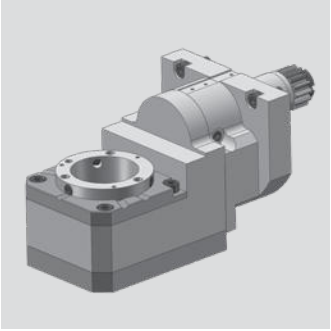

# Citizen

**Gewindewirbelapparat modular**
Thread whirling unit
Unité de tourbillonnement

**WG 35**

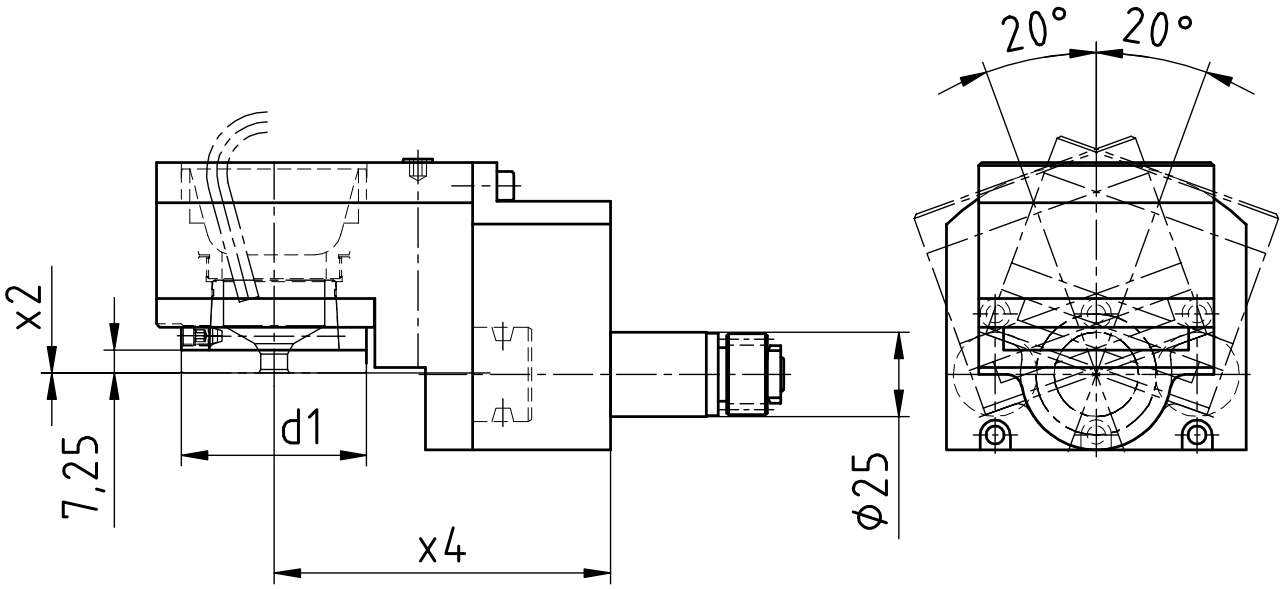


| [mm] | [mm] | [mm] | Spindle<br>Broche | [Nm] | [rpm] | | Outside cooling<br>Lubrificat. ext. | Internal cooling<br>Lubrificat. cent. | [bar] | Order no.<br>Nº de Code |
|---|---|---|---|---|---|---|---|---|---|---|
| **d1** | **x2** | **x4** | **Spindel** | **T max** | **n max** | **i** | **Aussenkühlung** | **Innenkühlung** | **p** | **Bestellnummer** |
| 54 | 0 | 100 | WFW 50 | 16 | 6.000 | 1:1 | x | | | MPU.LSW.424.M0800.M16 |

| | |
|---|---|
| **Passend für Maschine:**<br>suitable machines:<br>approprié pour la machine: | M16-4M5<br>M16-4M8<br>L 12-1M7 |

| | |
|---|---|
| **Ähnlich OEM Nr.**<br>similar to OEM no.<br>semblable au OEM nombre | |

# Citizen

**Axial-Bohr- und Fräskopf**
Axial drilling and milling head
Outil de perçage et de fraisage axiale

**WG 35**

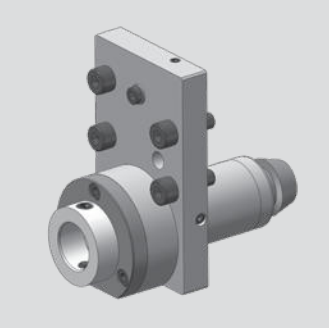

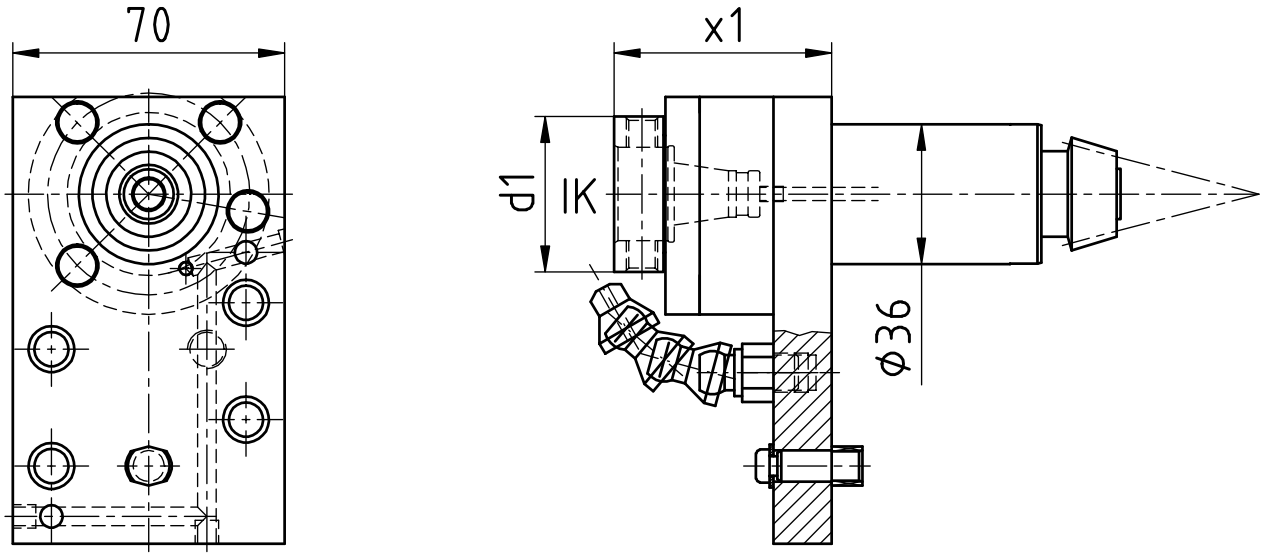


| [mm] | [mm] | Spindle<br>Broche | [Nm] | [rpm] | | Outside cooling<br>Lubrificat. ext. | Internal cooling<br>Lubrificat. cent. | [bar] | Order no.<br>Nº de Code |
|---|---|---|---|---|---|---|---|---|---|
| **d1** | **x1** | **Spindel** | **T max** | **n max** | **i** | **Aussenkühlung** | **Innenkühlung** | **p** | **Bestellnummer** |
| 40 | 56 | WFB 24-16 | 16 | 5.000 | 1:1 | x | | | MPU.KSC.110.AA0.B24 |
| 40 | 56 | WFB 24-16 | 16 | 5.000 | 1:1 | x | x | 80 | MPU.KSC.110.AE0.B24 |

| **Passend für Maschine:**<br>suitable machines:<br>approprié pour la machine: | M220-III | M232-V | M332-III | M32-4M8 |
|---|---|---|---|---|
| | M220-V | M320-III | M332-V | |
| | M232-III | M320-V | M32-4M5 | |

| **Ähnlich OEM Nr.**<br>similar to OEM no.<br>semblable au OEM nombre | KSC-110 |
|---|---|

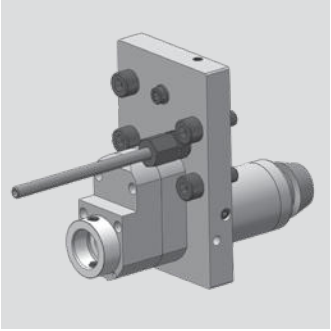

# Citizen

**Axial-Bohr- und Fräskopf**
Axial drilling and milling head
Outil de perçage et de fraisage axiale

**WG 35**

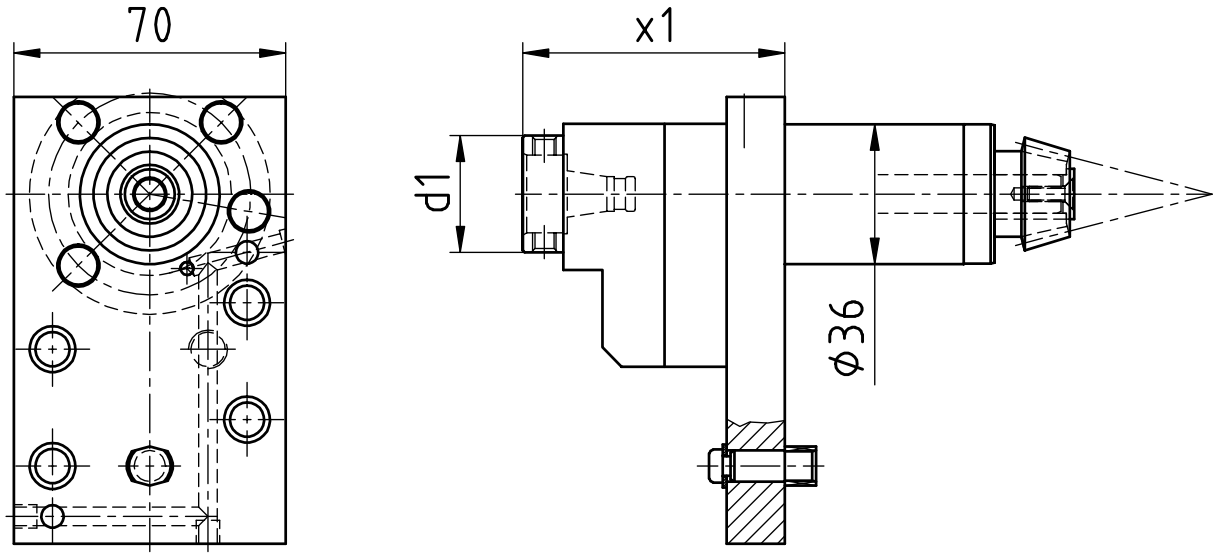


| [mm] | [mm] | Spindle<br>Broche | [Nm] | [rpm] | | Outside cooling<br>Lubrificat. ext. | Internal cooling<br>Lubrificat. cent. | [bar] | Order no.<br>Nº de Code |
|---|---|---|---|---|---|---|---|---|---|
| **d1** | **x1** | **Spindel** | **T max** | **n max** | **i** | **Aussenkühlung** | **Innenkühlung** | **p** | **Bestellnummer** |
| 40 | 67,5 | WFB 20-12 | 3 | 15.000 | 1:3 | x | | | MPU.KSC.110.BA0.B20 |

| **Passend für Maschine:**<br>suitable machines:<br>approprié pour la machine: | M220-III | M232-V | M332-III | M32-4M8 |
|---|---|---|---|---|
| | M220-V | M320-III | M332-V | |
| | M232-III | M320-V | M32-4M5 | |

| **Ähnlich OEM Nr.**<br>similar to OEM no.<br>semblable au OEM nombre | KSC-110 |
|---|---|

# Citizen

**Radial-Bohr- und Fräskopf**
Radial drilling and milling head )
Outil de perçage et de fraisage radiale

**WG 35**

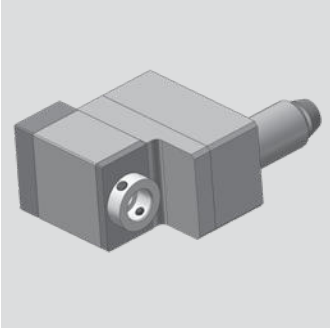

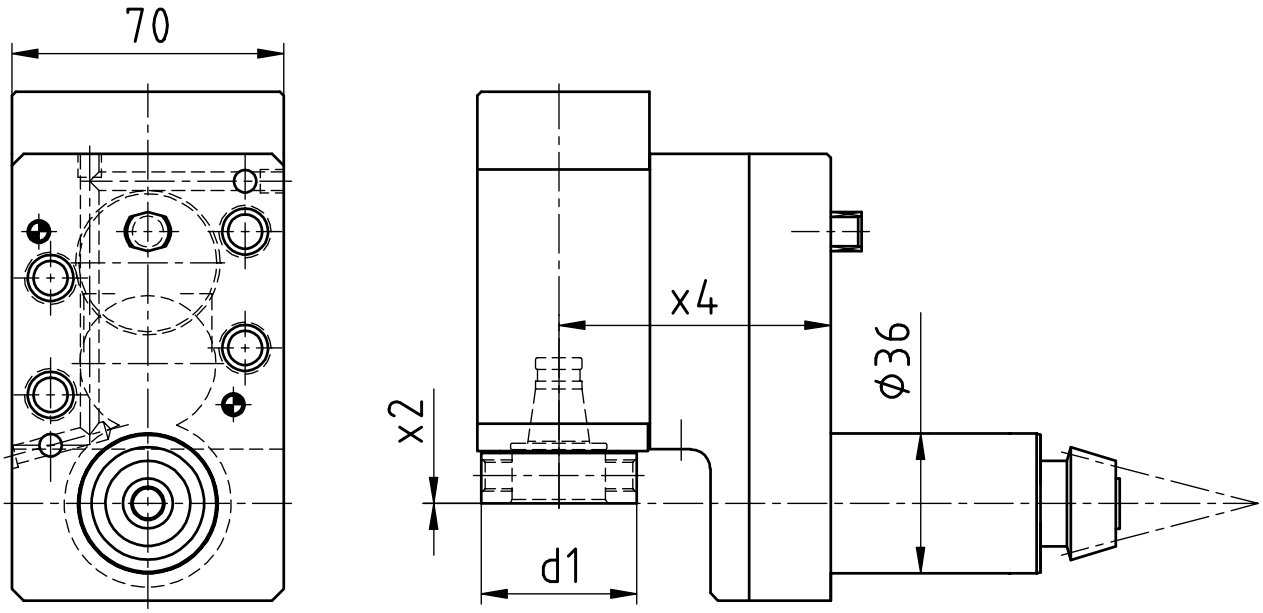


| [mm] | [mm] | [mm] | Spindle<br>Broche | [Nm] | [rpm] | | Outside cooling<br>Lubrificat. ext. | Internal cooling<br>Lubrificat. cent. | [bar] | Order no.<br>Nº de Code |
|---|---|---|---|---|---|---|---|---|---|---|
| **d1** | **x2** | **x4** | **Spindel** | **T max** | **n max** | **i** | **Aussenkühlung** | **Innenkühlung** | **p** | **Bestellnummer** |
| 40 | 0 | 70 | WFB 24-16 | 10 | 10.000 | 1:2 | x | | | MPU.KSE.310.XA0.B24 |
| 40 | 0 | 70 | WFB 24-16 | 10 | 10.000 | 1:2 | x | x | 80 | MPU.KSE.310.XE0.B24 |
| 50 | 30 | 70 | WFB 32-20 | 15 | 5.000 | 1:1 | x | | | MPU.KSE.310.VA0.B32 |
| 50 | 30 | 70 | WFB 32-20 | 15 | 5.000 | 1:1 | x | x | 80 | MPU.KSE.310.VE0.B32 |
| 50 | 30 | 70 | WFB 32-20 | 30 | 2.500 | 2:1 | x | | | MPU.KSE.310.WA0.B32 |
| 50 | 30 | 70 | WFB 32-20 | 30 | 2.500 | 2:1 | x | x | 80 | MPU.KSE.310.WE0.B32 |

| **Passend für Maschine:**<br>suitable machines:<br>approprié pour la machine: | M220-III<br>M220-V<br>M232-III | M232-V<br>M320-III<br>M320-V | M332-III<br>M332-V<br>M32-4M5 | M32-4M8 |
|---|---|---|---|---|

| **Ähnlich OEM Nr.**<br>similar to OEM no.<br>semblable au OEM nombre | KSC-110 |
|---|---|

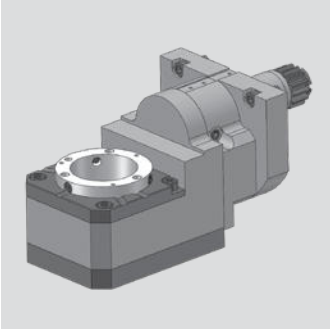

# Citizen

**Gewindewirbelapparat modular**
Thread whirling unit
Unité de tourbillonnement

**WG 35**

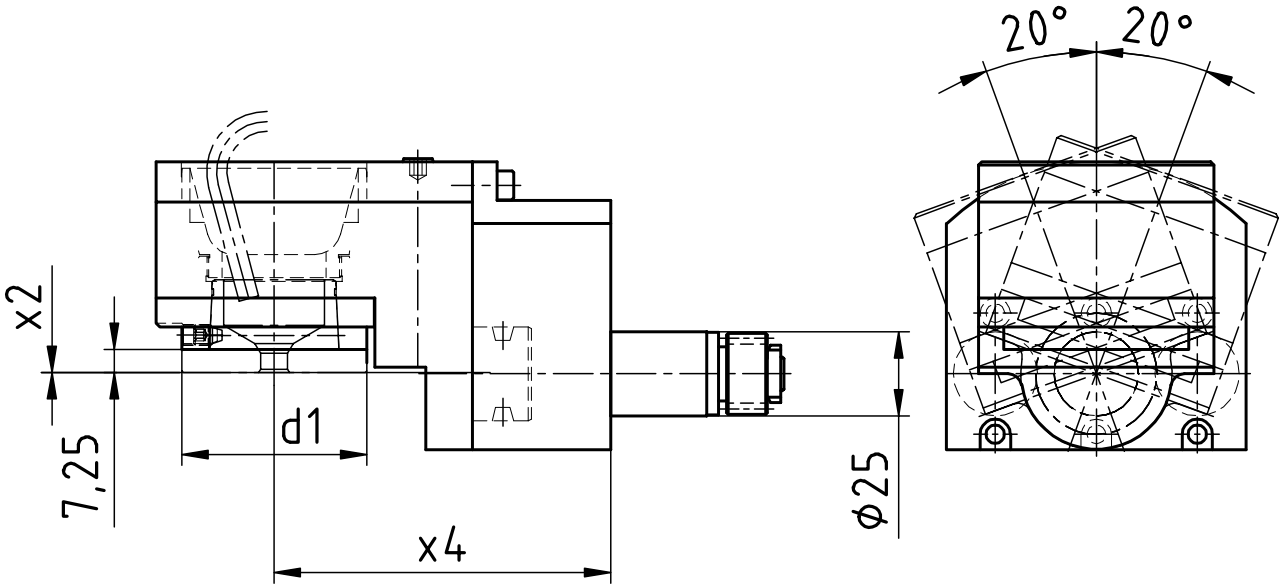


| [mm] | [mm] | [mm] | Spindle<br>Broche | [Nm] | [rpm] | | Outside cooling<br>Lubrificat. ext. | Internal cooling<br>Lubrificat. cent. | [bar] | Order no.<br>Nº de Code |
|---|---|---|---|---|---|---|---|---|---|---|
| **d1** | **x2** | **x4** | **Spindel** | **T max** | **n max** | **i** | **Aussenkühlung** | **Innenkühlung** | **p** | **Bestellnummer** |
| 54 | 0 | 100 | WFW 50 | 16 | 6.000 | 1:1 | x | | | MPU.LSW.101.M0800.L12 |

| | |
|---|---|
| **Passend für Maschine:**<br>suitable machines:<br>approprié pour la machine: | L12 |

| | |
|---|---|
| **Ähnlich OEM Nr.**<br>similar to OEM no.<br>semblable au OEM nombre | |

# Modulare Aggregatetechnik

# DMG MORI

## Katalog GS-02

# WFB-Adapterpool

Indications for the customer

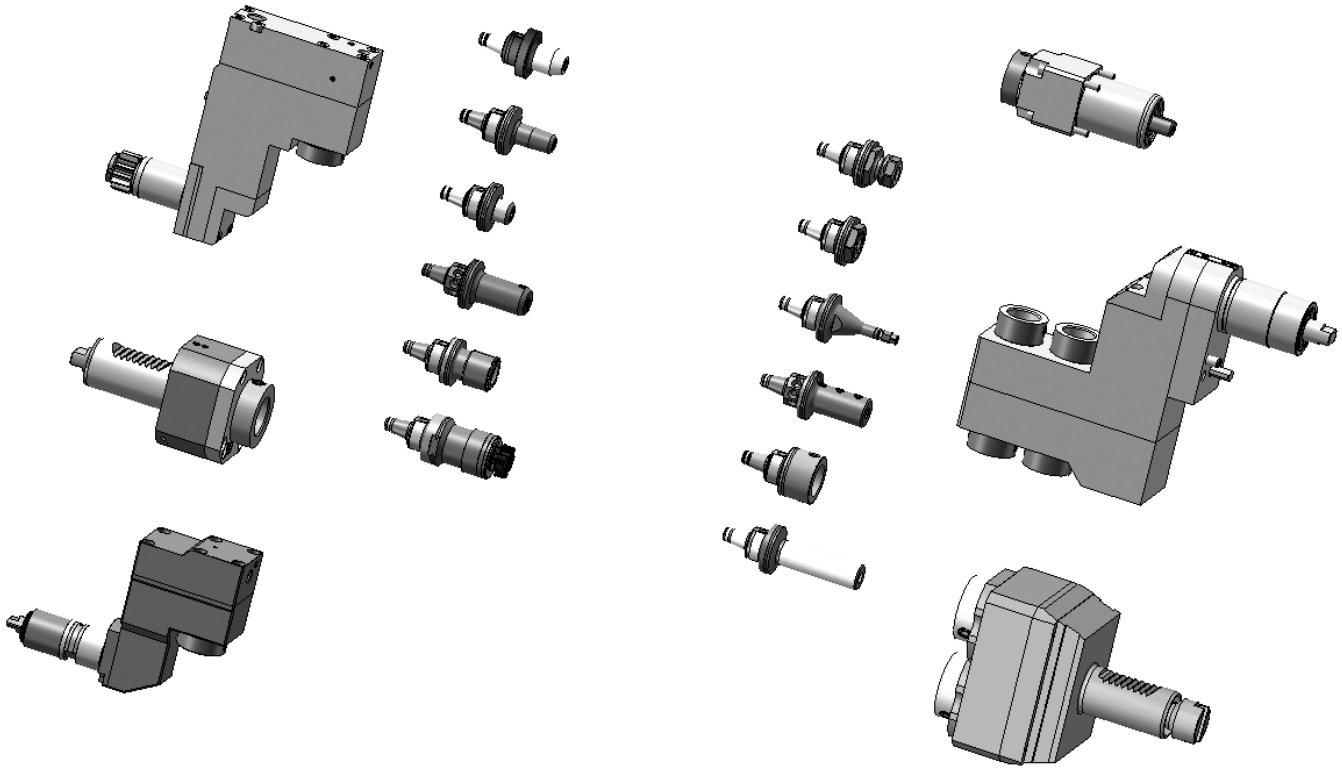

**Mit den Werkzeughaltern von W&F in statischer oder angetriebener Ausführung und dem WFB-Adaptersystem haben Sie die einzigartige Möglichkeit, für sämtliche Hersteller egal ob im Kurzdrehen, Langdrehen oder Mehrspindeldrehen ein durchgängiges modulares Werkzeugsystem einzusetzen.**

The W&F tool holders are in static or driven performance and beyond that, the WFB-adapter system offers you an unique option to use it for every machine manufacturer whether you are manufacturer producing with swiss type lathes, standard turning machines or multispindle turning machines, WFB is suitable.

# DMG MORI - SPRINT

**Axial-Bohr- und Fräskopf**
Axial drilling and milling head
Outil de perçage et de fraisage axiale

**WG 35**

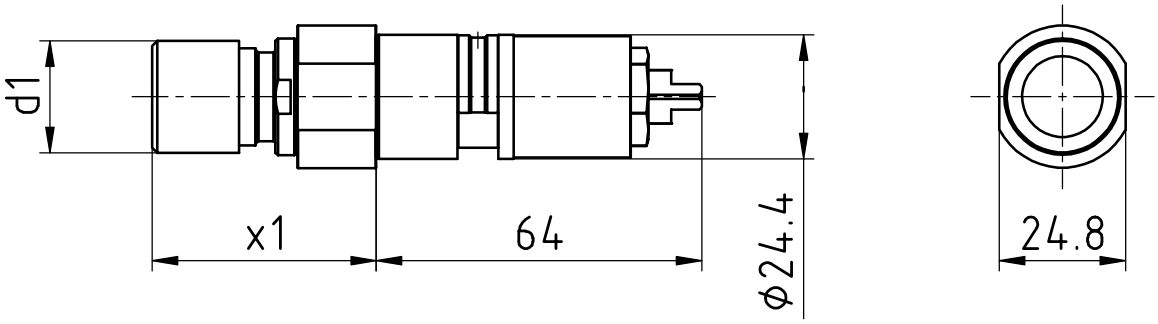


| [mm] | [mm] | Spindle<br>Broche | [Nm] | [rpm] | | Outside cooling<br>Lubrificat. ext. | Internal cooling<br>Lubrificat. cent. | [bar] | Order no.<br>Nº de Code |
|---|---|---|---|---|---|---|---|---|---|
| **d1** | **x1** | **Spindel** | **T max** | **n max** | **i** | **Aussenkühlung** | **Innenkühlung** | **p** | **Bestellnummer** |
| 22 | 44 | ER16 MINI | 8 | 6.000 | 1:1 | | | | MPU.Z24.E16.AA0.SP20 |

| | | |
|---|---|---|
| **Passend für Maschine:**<br>suitable machines:<br>approprié pour la machine: | Sprint 20l5 | Speed 20l8 |
| | Sprint 20l8 | Speed 20l8 linear |
| | Sprint 20l8 linear | Speed 20l11 linear |

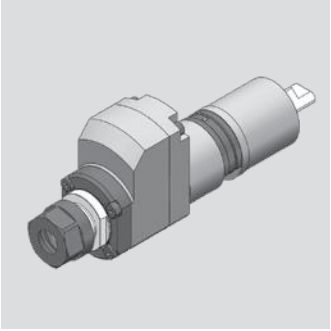

# DMG MORI - SPRINT

**Axial-Bohr- und Fräskopf**
Axial drilling and milling head
Outil de perçage et de fraisage axiale

**WG 35**

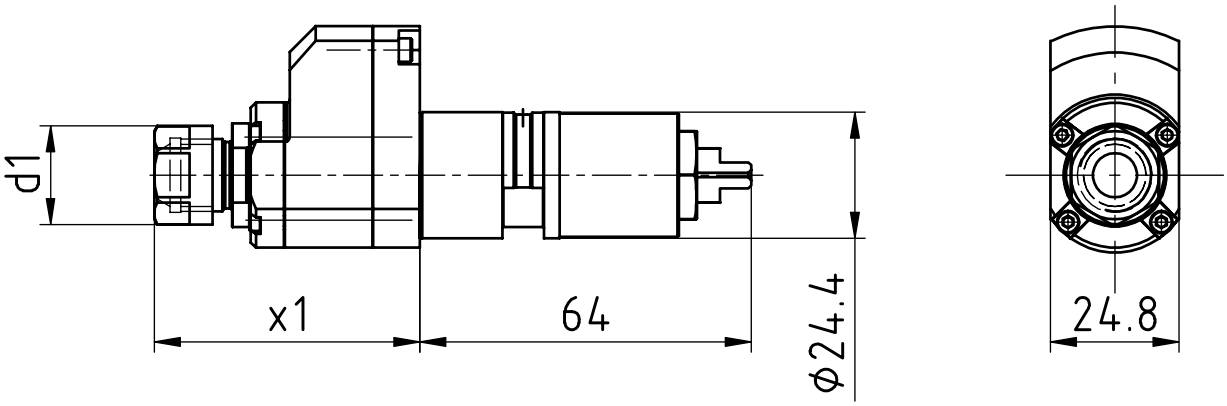


| [mm] | [mm] | Spindle<br>Broche | [Nm] | [rpm] | | Outside cooling<br>Lubrificat. ext. | Internal cooling<br>Lubrificat. cent. | [bar] | Order no.<br>Nº de Code |
|---|---|---|---|---|---|---|---|---|---|
| **d1** | **x1** | **Spindel** | **T max** | **n max** | **i** | **Aussenkühlung** | **Innenkühlung** | **p** | **Bestellnummer** |
| 19 | 51 | ER11 | 2 | 24.000 | 1:4 | | | | MPU.Z24.E11.BA0.SP20 |

| | | |
|---|---|---|
| **Passend für Maschine:**<br>suitable machines:<br>approprié pour la machine: | Sprint 20l5 | Speed 20l8 |
| | Sprint 20l8 | Speed 20l8 linear |
| | Sprint 20l8 linear | Speed 20l11 linear |

# DMG MORI - SPRINT

**Radial-Bohr- und Fräskopf**
Radial drilling and milling head
Outil de perçage et de fraisage radiale

**WG 35**

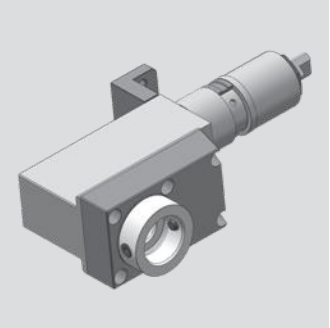

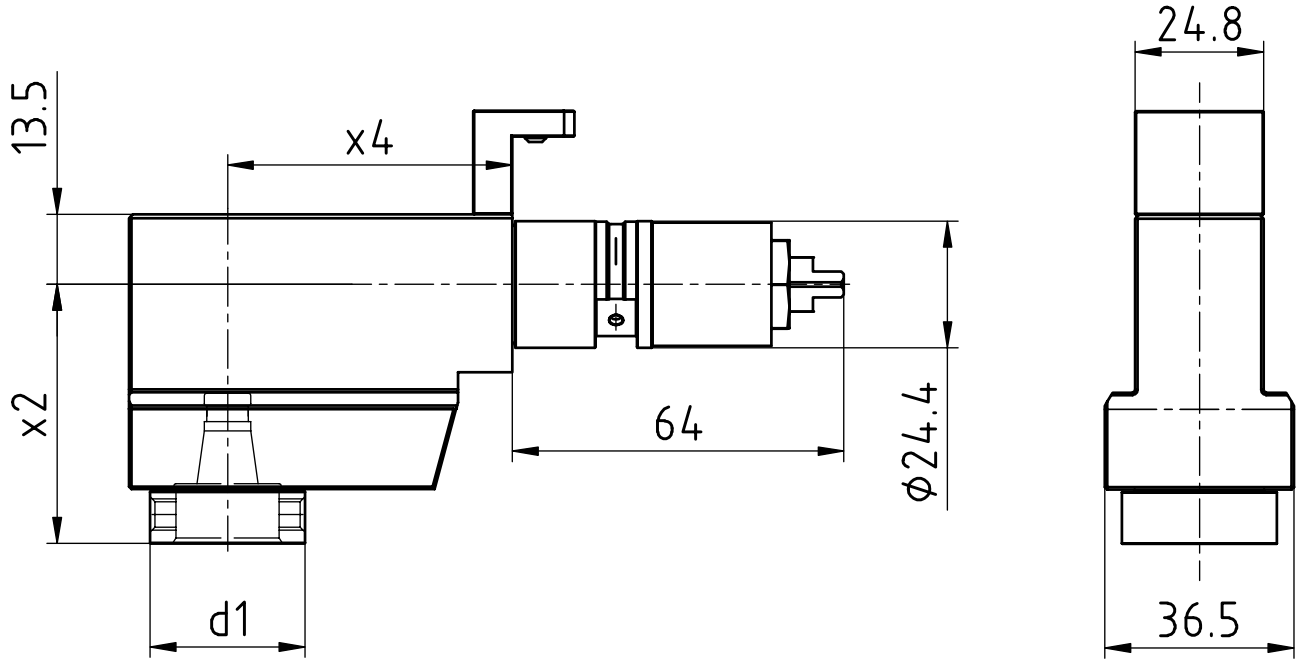


| [mm] | [mm] | [mm] | Spindle<br>Broche | [Nm] | [rpm] | | Outside cooling<br>Lubrificat. ext. | Internal cooling<br>Lubrificat. cent. | [bar] | Order no.<br>Nº de Code |
|---|---|---|---|---|---|---|---|---|---|---|
| **d1** | **x2** | **x4** | **Spindel** | **T max** | **n max** | **i** | **Aussenkühlung** | **Innenkühlung** | **p** | **Bestellnummer** |
| 30 | 50 | 55 | WFB 20-12 | 5 | 9.000 | 1:1,5 | | | | MPU.Z24.B20.RA0.SP20 |

| **Passend für Maschine:**<br>suitable machines:<br>approprié pour la machine: | Sprint 20l5<br>Sprint 20l8<br>Sprint 20l8 linear | Speed 20l8<br>Speed 20l8 linear<br>Speed 20l11 linear |
|---|---|---|

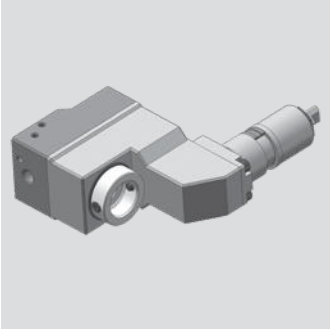

# DMG MORI - SPRINT

**Radial Bohr- und Fräskopf**
Radial drilling and milling head
Outil de perçage et de fraisage radiale

**WG 35**

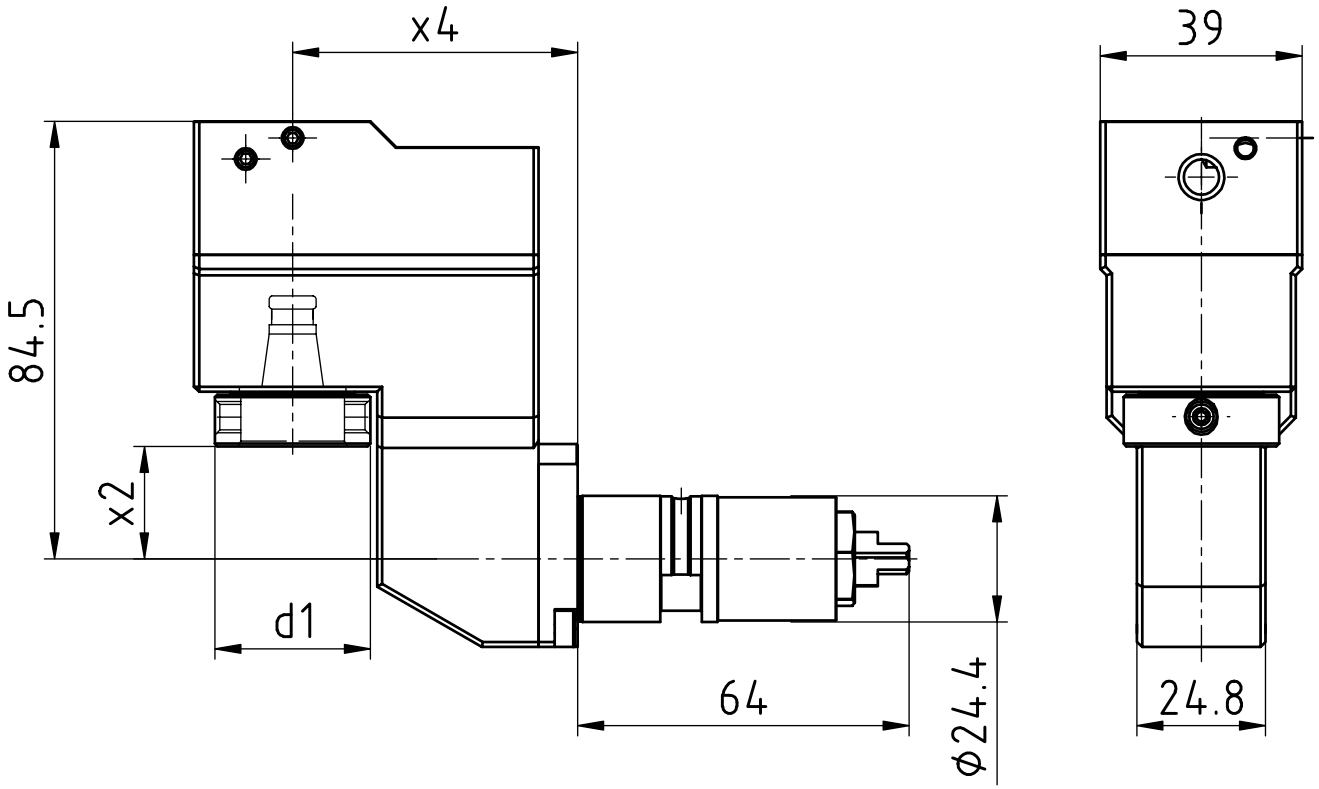


| [mm] | [mm] | [mm] | Spindle<br>Broche | [Nm] | [rpm] | | Outside cooling<br>Lubrificat. ext. | Internal cooling<br>Lubrificat. cent. | [bar] | Order no.<br>Nº de Code |
|---|---|---|---|---|---|---|---|---|---|---|
| **d1** | **x2** | **x4** | **Spindel** | **T max** | **n max** | **i** | **Aussenkühlung** | **Innenkühlung** | **p** | **Bestellnummer** |
| 30 | 21,75 | 55 | WFB 20-12 | 4 | 11.150 | 1:1,86 | | | | MPU.Z24.B20.0A0.SP20 |
| 30 | 21,75 | 55 | WFB 20-12 | 4 | 11.150 | 1:1,86 | | x | 80 | MPU.Z24.B20.0E0.SP20 |
| 30 | 21,75 | 65 | WFB 20-12 | 4 | 11.150 | 1:1,86 | | | | MPU.Z24.B20.0A0.SP20S |
| 30 | 21,75 | 65 | WFB 20-12 | 4 | 11.150 | 1:1,86 | | x | 80 | MPU.Z24.B20.0E0.SP20S |

| **Passend für Maschine:**<br>suitable machines:<br>approprié pour la machine: | Sprint 20l5<br>Sprint 20l8<br>Sprint 20l8 linear | Speed 20l8<br>Speed 20l8 linear<br>Speed 20l11 linear |
|---|---|---|

# DMG MORI - SPRINT

**Bohr- und Fräskopf winkelverstellbar**
Drilling and milling swivel head
Outil de perçage et de fraisage tournant

**WG 35**

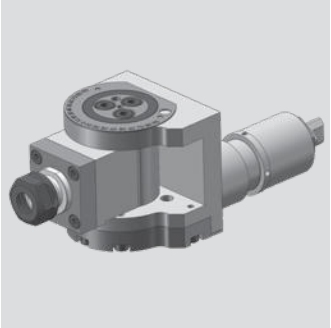

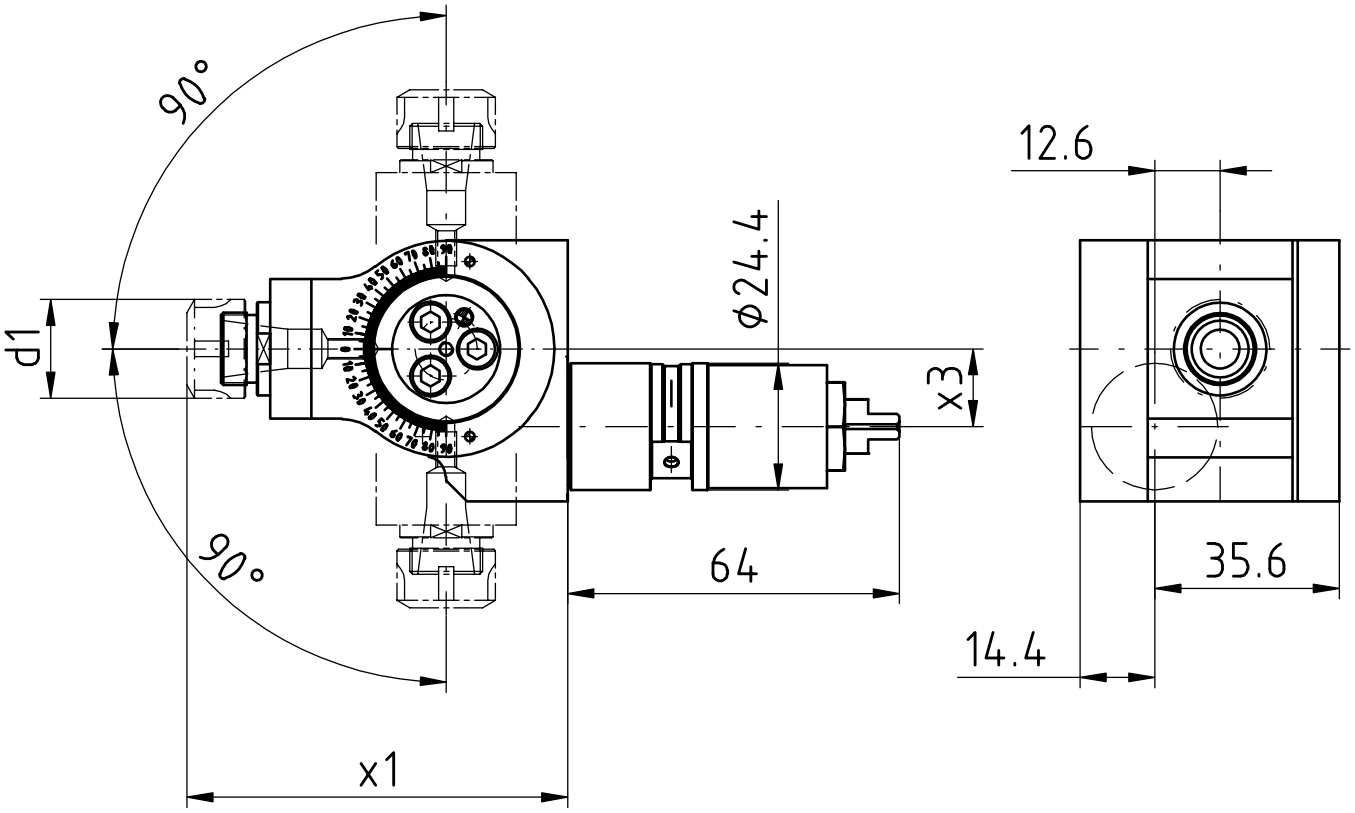


| [mm] | [mm] | [mm] | Spindle<br>Broche | [Nm] | [rpm] | | Outside cooling<br>Lubrificat. ext. | Internal cooling<br>Lubrificat. cent. | [bar] | Order no.<br>Nº de Code |
|---|---|---|---|---|---|---|---|---|---|---|
| **d1** | **x1** | **x3** | **Spindel** | **T max** | **n max** | **i** | **Aussenkühlung** | **Innenkühlung** | **p** | **Bestellnummer** |
| 19 | 50 | 15 | ER11 | 5 | 6.000 | 1:1 | | | | MPU.Z24.E11.SA0.SP20 |

| | | |
|---|---|---|
| **Passend für Maschine:**<br>suitable machines:<br>approprié pour la machine: | Sprint 20l5 | Speed 20l8 |
| | Sprint 20l8 | Speed 20l8 linear |
| | Sprint 20l8 linear | Speed 20l11 linear |

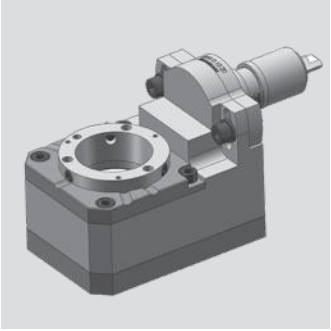

# DMG MORI - SPRINT

**Gewindewirbelapparat modular**
Thread whirling unit
Unité de tourbillonnement

**WG 35**

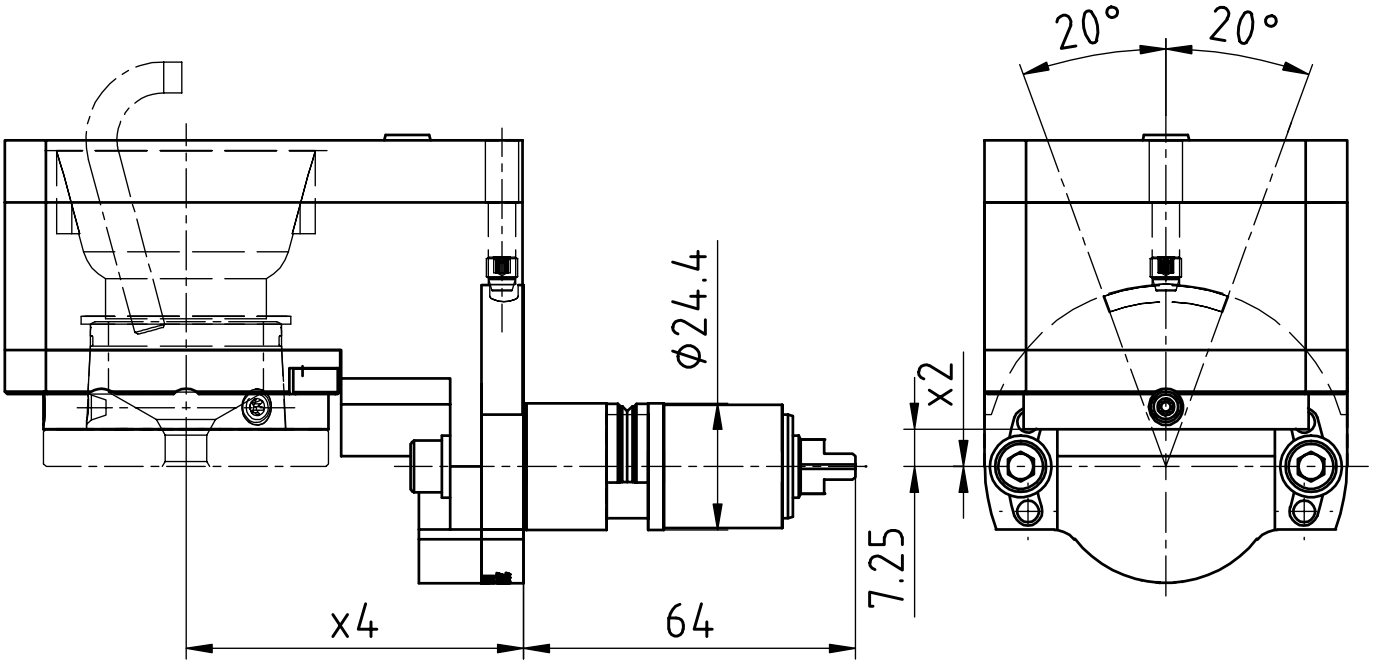


| [mm] | [mm] | [mm] | Spindle<br>Broche | [Nm] | [rpm] | | Outside cooling<br>Lubrificat. ext. | Internal cooling<br>Lubrificat. cent. | [bar] | Order no.<br>Nº de Code |
|---|---|---|---|---|---|---|---|---|---|---|
| **d1** | **x2** | **x4** | **Spindel** | **T max** | **n max** | **i** | **Aussenkühlung** | **Innenkühlung** | **p** | **Bestellnummer** |
| 54 | 0 | 65,2 | WFW 50 | 16 | 3.000 | 2:1 | x | | | MPU.Z24.M0800.SP20 |

| | | |
|---|---|---|
| **Passend für Maschine:**<br>suitable machines:<br>approprié pour la machine: | Sprint 20l5 | Speed 20l8 |
| | Sprint 20l8 | Speed 20l8 linear |
| | Sprint 20l8 linear | Speed 20l11 linear |

# DMG MORI - SPRINT

**Axial Bohr- und Fräskopf**
Axial drilling and milling head
Outil de perçage et de fraisage axiale

**WG 35**

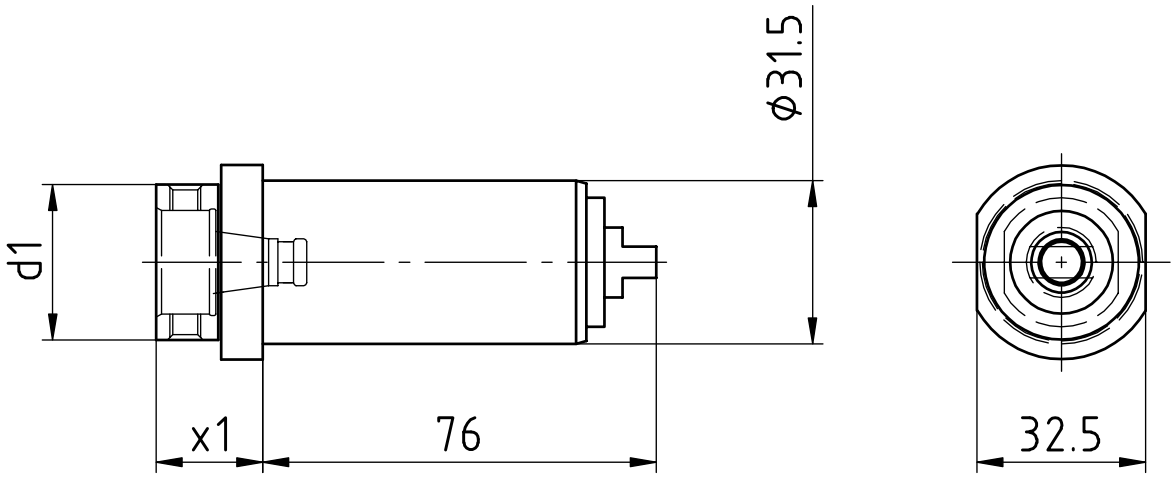


| [mm] | [mm] | Spindle<br>Broche | [Nm] | [rpm] | | Outside cooling<br>Lubrificat. ext. | Internal cooling<br>Lubrificat. cent. | [bar] | Order no.<br>Nº de Code |
|---|---|---|---|---|---|---|---|---|---|
| **d1** | **x1** | **Spindel** | **T max** | **n max** | **i** | **Aussenkühlung** | **Innenkühlung** | **p** | **Bestellnummer** |
| 30 | 20,5 | WFB 20-12 | 10 | 6.500 | 1:1 | | | | MPU.M31.B20.AA0.SP42 |

| **Passend für Maschine:**<br>suitable machines:<br>approprié pour la machine: | Sprint 32\|5<br>Sprint 32\|8<br>Sprint 42 linear | Sprint 42\|10 linear<br>Speed 32\|10 linear |
|---|---|---|

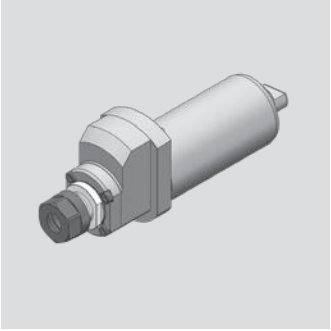

# DMG MORI - SPRINT

**Axial Bohr- und Fräskopf**
Axial drilling and milling head
Outil de perçage et de fraisage axiale

**WG 35**

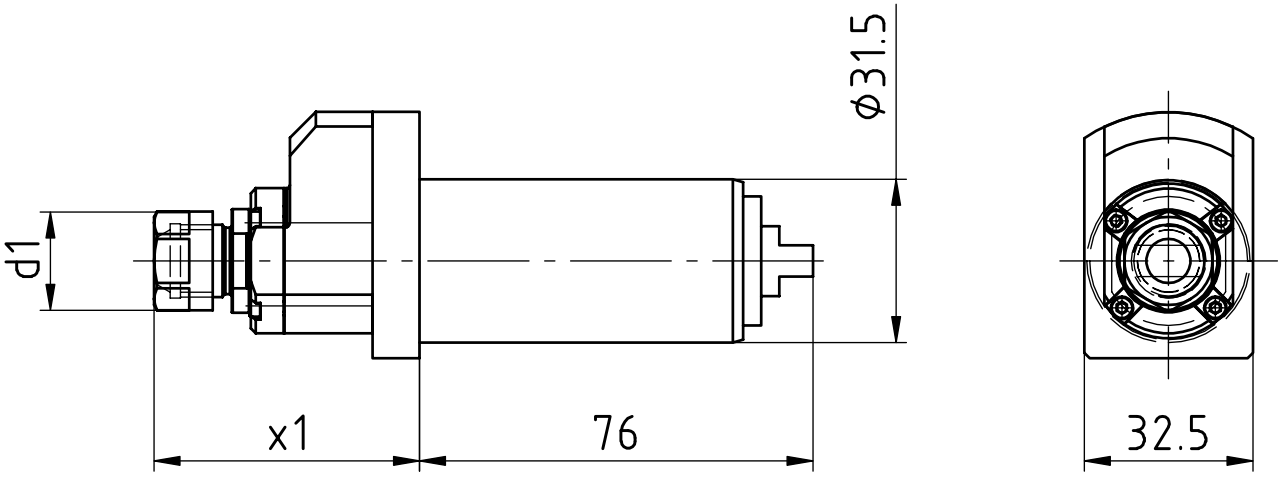


| [mm] | [mm] | Spindle<br>Broche | [Nm] | [rpm] | | Outside cooling<br>Lubrificat. ext. | Internal cooling<br>Lubrificat. cent. | [bar] | Order no.<br>Nº de Code |
|---|---|---|---|---|---|---|---|---|---|
| **d1** | **x1** | **Spindel** | **T max** | **n max** | **i** | **Aussenkühlung** | **Innenkühlung** | **p** | **Bestellnummer** |
| 19 | 51 | ER11 | 2 | 26.000 | 1:4 | | | | MPU.M31.E11.BA0.SP42 |

| | | |
|---|---|---|
| **Passend für Maschine:**<br>suitable machines:<br>approprié pour la machine: | Sprint 32\|5<br>Sprint 32\|8<br>Sprint 42 linear | Sprint 42\|10 linear<br>Speed 32\|10 linear |

# DMG MORI - SPRINT

**Radial Bohr- und Fräskopf**
Radial drilling and milling head
Outil de perçage et de fraisage radiale

**WG 35**

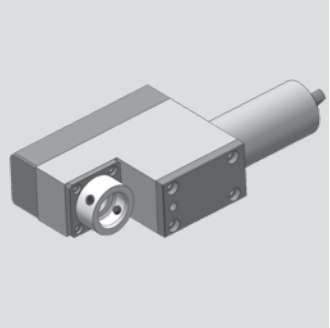

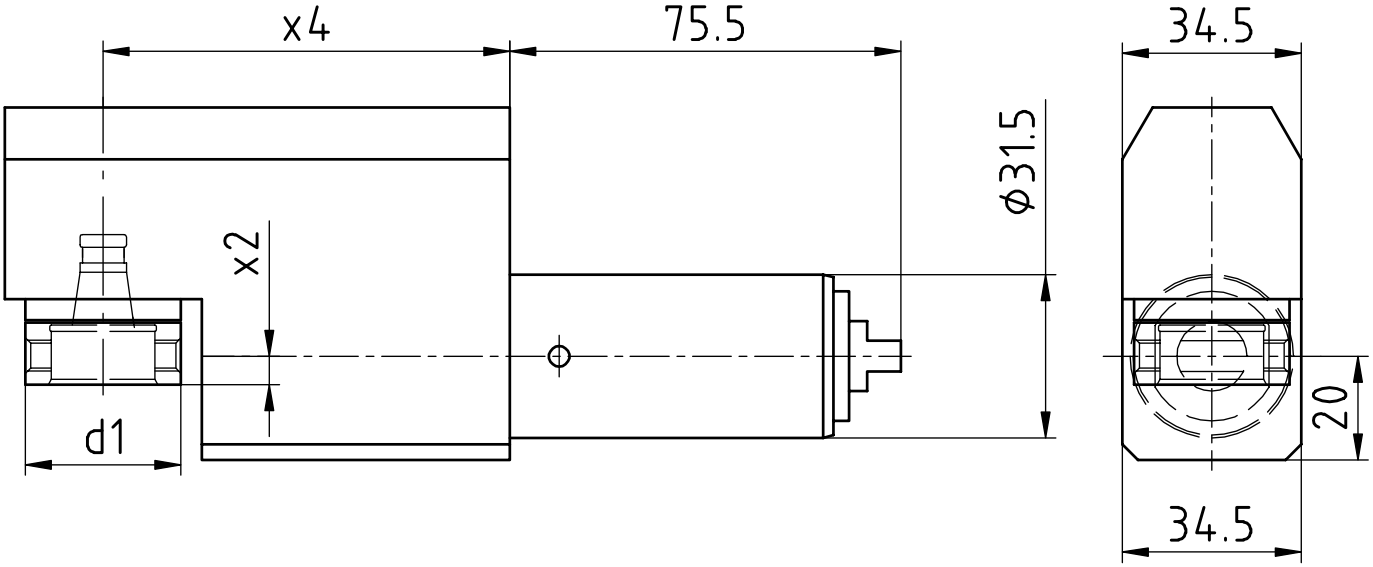


| [mm] | [mm] | [mm] | Spindle<br>Broche | [Nm] | [rpm] | | Outside cooling<br>Lubrificat. ext. | Internal cooling<br>Lubrificat. cent. | [bar] | Order no.<br>Nº de Code |
|---|---|---|---|---|---|---|---|---|---|---|
| **d1** | **x2** | **x4** | **Spindel** | **T max** | **n max** | **i** | **Aussenkühlung** | **Innenkühlung** | **p** | **Bestellnummer** |
| 30 | 5,5 | 78,5 | WFB 20-12 | 3 | 19.500 | 1:3 | | | | MPU.M31.B20.ZA0.SP42 |
| 30 | 5,5 | 78,5 | WFB 20-12 | 3 | 19.500 | 1:3 | | x | 80 | MPU.M31.B20.ZE0.SP42 |
| 30 | 5,5 | 78,5 | WFB 20-12 | 12 | 5.200 | 1,25:1 | | | | MPU.M31.B20.VA0.SP42 |

| | | |
|---|---|---|
| **Passend für Maschine:**<br>suitable machines:<br>approprié pour la machine: | Sprint 32\|5<br>Sprint 32\|8<br>Sprint 42 linear | Sprint 42\|10 linear<br>Speed 32\|10 linear |

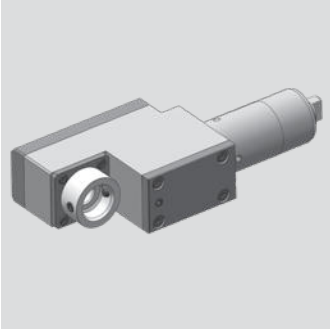

# DMG MORI - SPRINT

**Radial Bohr- und Fräskopf**
Radial drilling and milling head
Outil de perçage et de fraisage radiale

**WG 35**

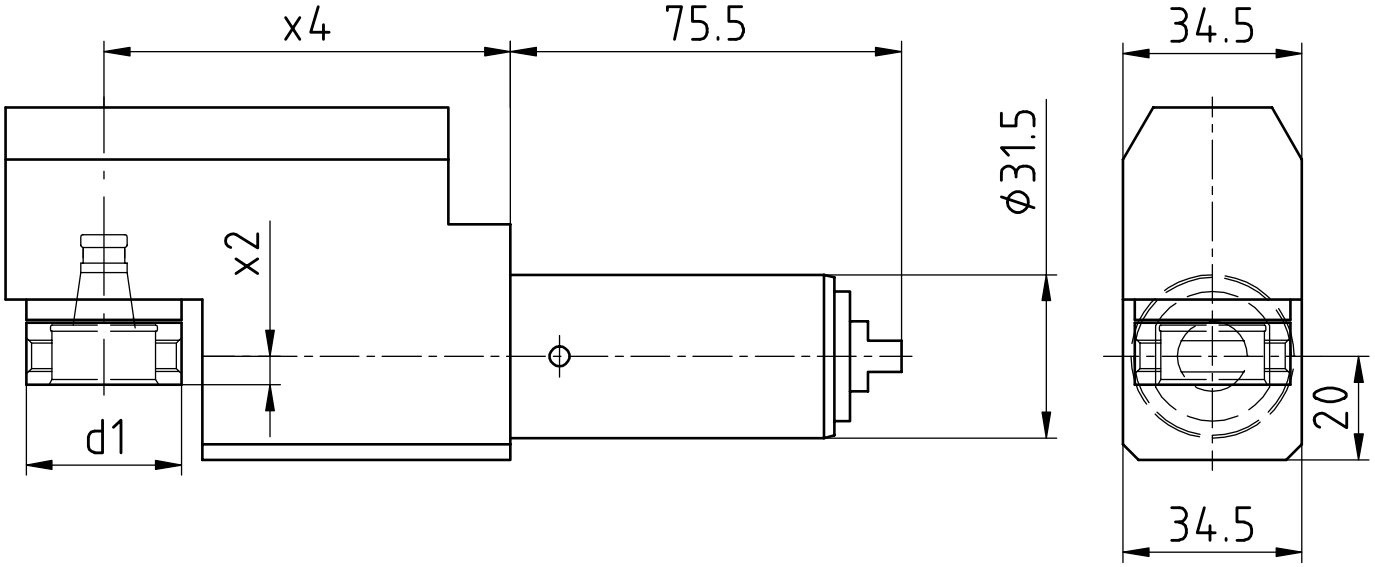


| [mm] | [mm] | [mm] | Spindle<br>Broche | [Nm] | [rpm] | | Outside cooling<br>Lubrificat. ext. | Internal cooling<br>Lubrificat. cent. | [bar] | Order no.<br>Nº de Code |
|---|---|---|---|---|---|---|---|---|---|---|
| **d1** | **x2** | **x4** | **Spindel** | **T max** | **n max** | **i** | **Aussenkühlung** | **Innenkühlung** | **p** | **Bestellnummer** |
| 30 | 5,5 | 78,5 | WFB 20-12 | 3 | 19.500 | 1:3 | | | | MPU.M31.B20.ZA0.SP42RS |

| | | |
|---|---|---|
| **Passend für Maschine:**<br>suitable machines:<br>approprié pour la machine: | Sprint 32\|5<br>Sprint 32\|8<br>Sprint 42 linear | Sprint 42\|10 linear<br>Speed 32\|10 linear |

# DMG MORI - SPRINT

**Bohr- und Fräskopf winkelverstellbar**
Drilling and milling swivel head
Outil de perçage et de fraisage tournant

**WG 35**

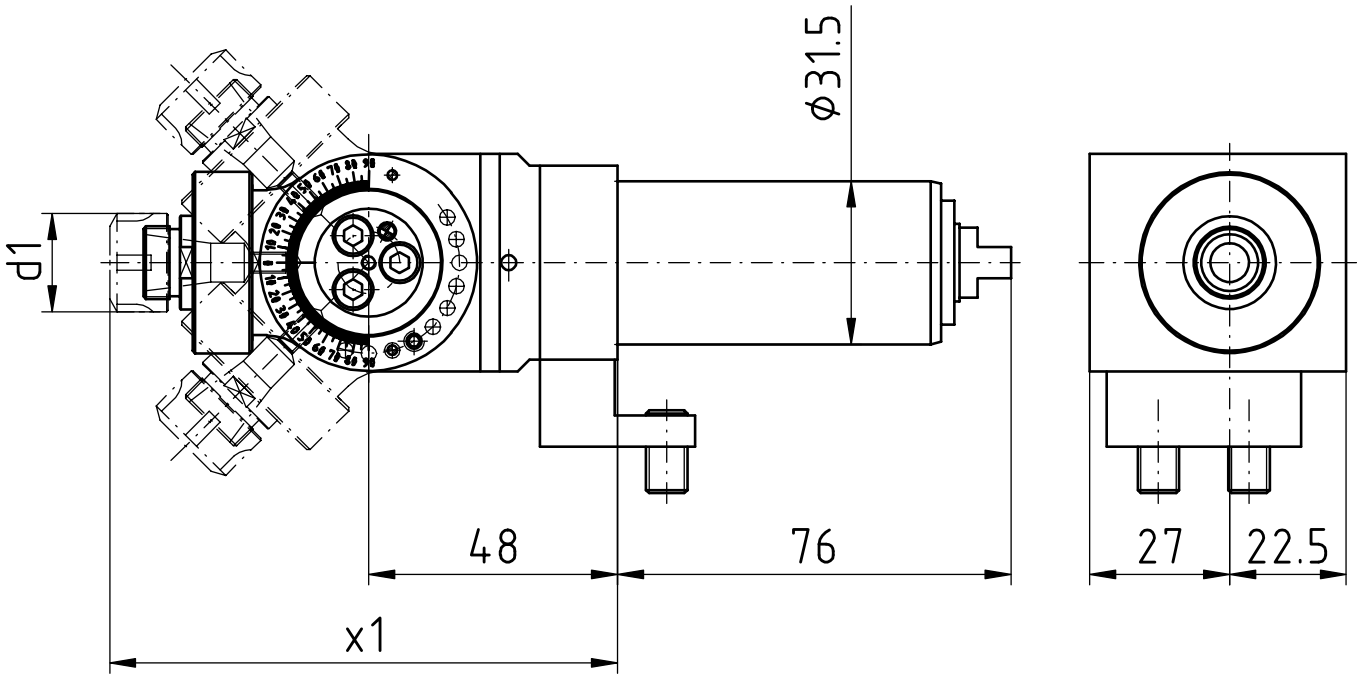


| [mm] | [mm] | Spindle<br>Broche | [Nm] | [rpm] | | Outside cooling<br>Lubrificat. ext. | Internal cooling<br>Lubrificat. cent. | [bar] | Order no.<br>Nº de Code |
|---|---|---|---|---|---|---|---|---|---|
| **d1** | **x1** | **Spindel** | **T max** | **n max** | **i** | **Aussenkühlung** | **Innenkühlung** | **p** | **Bestellnummer** |
| 19 | 98 | ER11 | 10 | 6.500 | 1:1 | | | | MPU.Z31.E11.SA0.SP42 |

| | | |
|---|---|---|
| **Passend für Maschine:**<br>suitable machines:<br>approprié pour la machine: | Sprint 32\|5<br>Sprint 32\|8<br>Sprint 42 linear | Sprint 42\|10 linear<br>Speed 32\|10 linear |

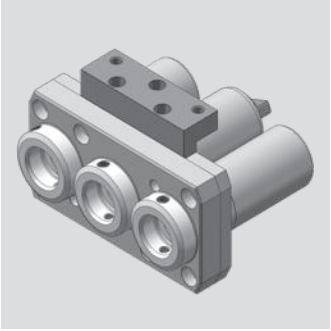

# DMG MORI - SPRINT

**Axial Bohr- und Fräskopf**
Axial drilling and milling head
Outil de perçage et de fraisage axiale

**WG 35**

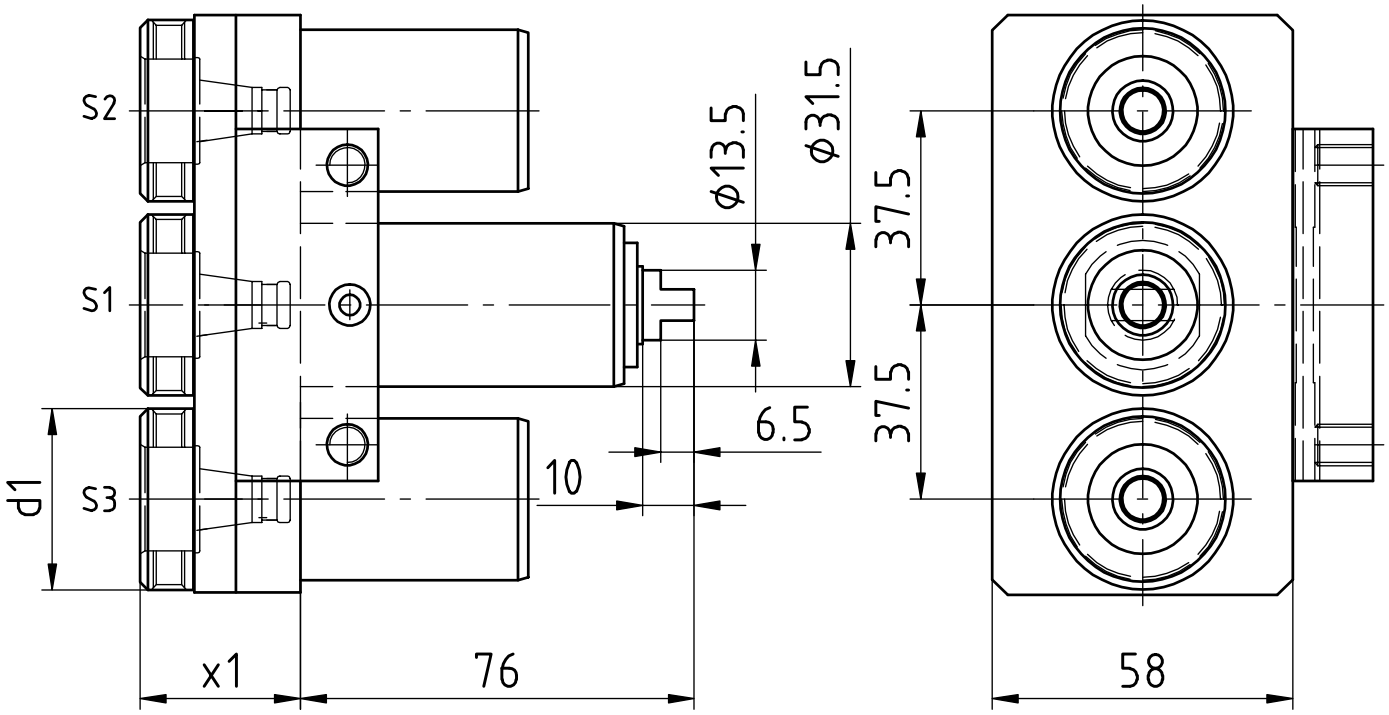


| [mm] | [mm] | Spindle<br>Broche | [Nm] | [rpm] | | Outside cooling<br>Lubrificat. ext. | Internal cooling<br>Lubrificat. cent. | [bar] | Order no.<br>Nº de Code |
|---|---|---|---|---|---|---|---|---|---|
| **d1** | **x1** | **Spindel** | **T max** | **n max** | **i** | **Aussenkühlung** | **Innenkühlung** | **p** | **Bestellnummer** |
| 35 | 31,5 | WFB 20-12 | 10* | 6.500* | 1:1* | | | | MPU.Z31.B20.MA0.SP42 |

| **Passend für Maschine:**<br>suitable machines:<br>approprié pour la machine: | Sprint 32\|5<br>Sprint 32\|8<br>Sprint 42 linear | Sprint 42\|10 linear<br>Speed 32\|10 linear |
|---|---|---|

* S1: 10 Nm/6.500 rpm/i=1:1
S2: 5 Nm/13.000 rpm/i=1:2
S3: 5 Nm/13.000 rpm/i=1:2

# DMG MORI - SPRINT

**Axial Bohr- und Fräskopf**
Axial drilling and milling head
Outil de perçage et de fraisage axiale

**WG 35**

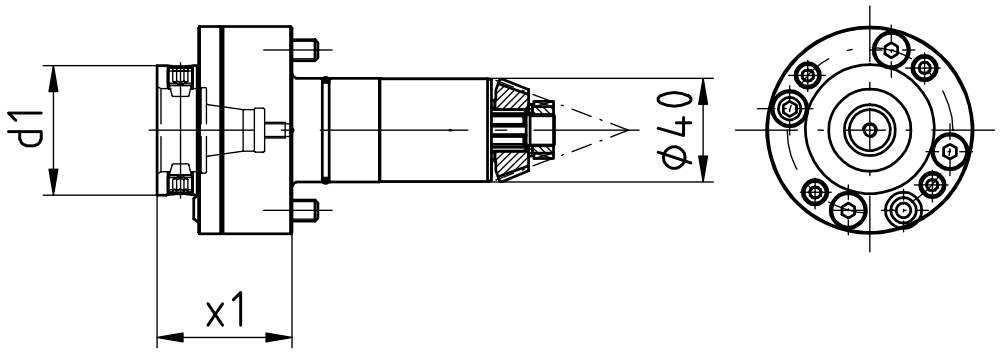


| [mm] | [mm] | Spindle<br>Broche | [Nm] | [rpm] | | Outside cooling<br>Lubrificat. ext. | Internal cooling<br>Lubrificat. cent. | [bar] | Order no.<br>Nº de Code |
|---|---|---|---|---|---|---|---|---|---|
| **d1** | **x1** | **Spindel** | **T max** | **n max** | **i** | **Aussenkühlung** | **Innenkühlung** | **p** | **Bestellnummer** |
| 50 | 52 | WFB 32-20 | 20 | 8.000 | 1:1 | x | | | MPU.Z40.B32.AA0.GITAL |
| 50 | 52 | WFB 32-20 | 20 | 8.000 | 1:1 | x | x | 80 | MPU.Z40.B32.AE0.GITAL |

| | |
|---|---|
| **Passend für Maschine:**<br>suitable machines:<br>approprié pour la machine: | Sprint 42l10 linear<br>Speed 32l10 linear |

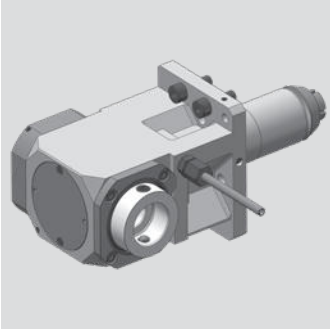

# DMG MORI - SPRINT

**Radial Bohr- und Fräskopf**
Radial drilling and milling head
Outil de perçage et de fraisage radiale

**WG 35**

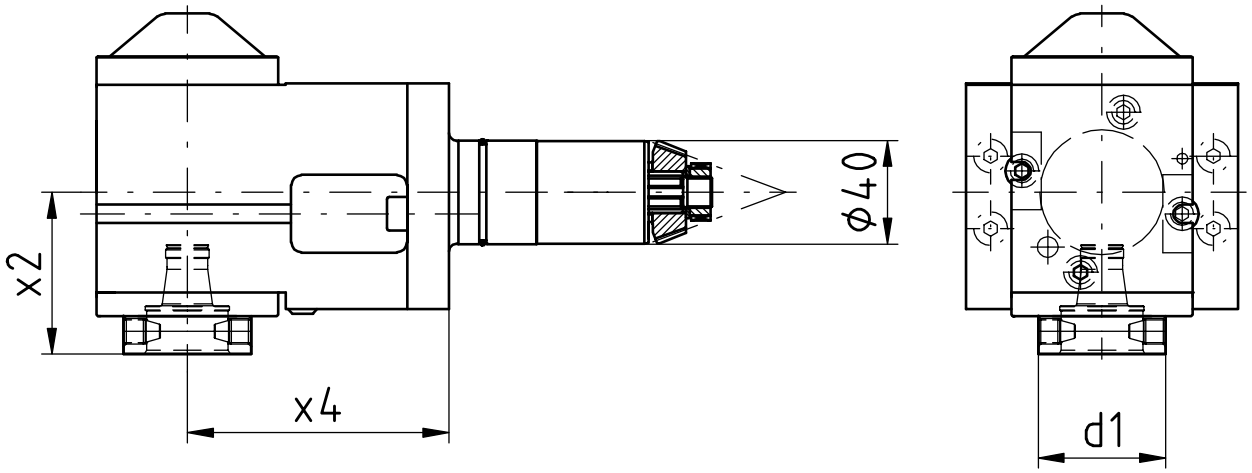


| [mm] | [mm] | [mm] | Spindle<br>Broche | [Nm] | [rpm] | | Outside cooling<br>Lubrificat. ext. | Internal cooling<br>Lubrificat. cent. | [bar] | Order no.<br>Nº de Code |
|---|---|---|---|---|---|---|---|---|---|---|
| **d1** | **x2** | **x4** | **Spindel** | **T max** | **n max** | **i** | **Aussenkühlung** | **Innenkühlung** | **p** | **Bestellnummer** |
| 50 | 62,5 | 101 | WFB 32-20 | 70 | 8.000 | 1:1 | x | | | MPU.Z40.B32.RA0.GITAL |
| 50 | 62,5 | 101 | WFB 32-20 | 70 | 8.000 | 1:1 | x | x | 80 | MPU.Z40.B32.RE0.GITAL |

| | |
|---|---|
| **Passend für Maschine:**<br>suitable machines:<br>approprié pour la machine: | Sprint 42l10 linear<br>Speed 32l10 linear |

# DMG MORI - SPRINT

**Radial Bohr- und Fräskopf**
Radial drilling and milling head
Outil de perçage et de fraisage radiale

**WG 35**

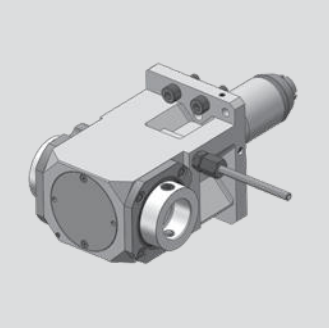

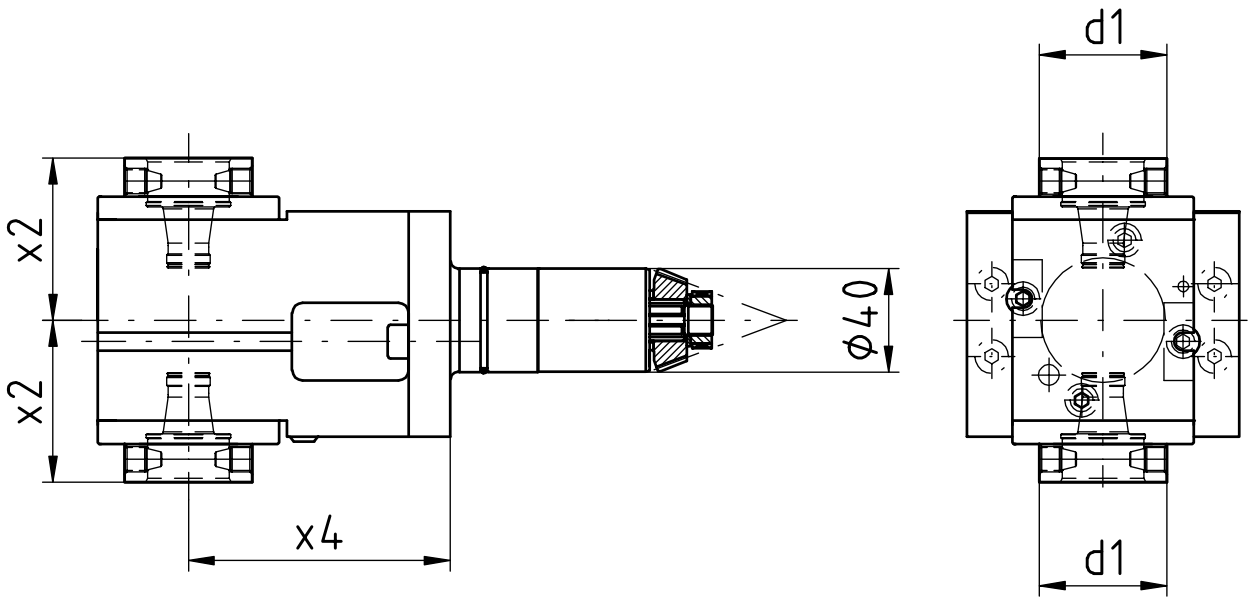


| [mm] | [mm] | [mm] | Spindle<br>Broche | [Nm] | [rpm] | | Outside cooling<br>Lubrificat. ext. | Internal cooling<br>Lubrificat. cent. | [bar] | Order no.<br>Nº de Code |
|---|---|---|---|---|---|---|---|---|---|---|
| **d1** | **x2** | **x4** | **Spindel** | **T max** | **n max** | **i** | **Aussenkühlung** | **Innenkühlung** | **p** | **Bestellnummer** |
| 50 | 62,5 | 101 | WFB 32-20 | 70 | 8.000 | 1:1 | x | | | MPU.Z40.B32.2A0.GITAL |

| | |
|---|---|
| **Passend für Maschine:**<br>suitable machines:<br>approprié pour la machine: | Sprint 42l10 linear<br>Speed 32l10 linear |

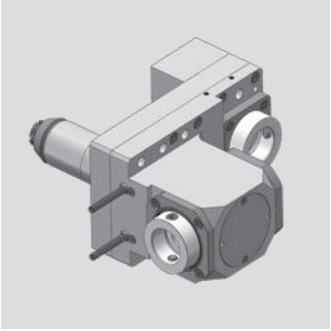

# DMG MORI - SPRINT

**Radial Bohr- und Fräskopf**
Radial drilling and milling head
Outil de perçage et de fraisage radiale

**WG 35**

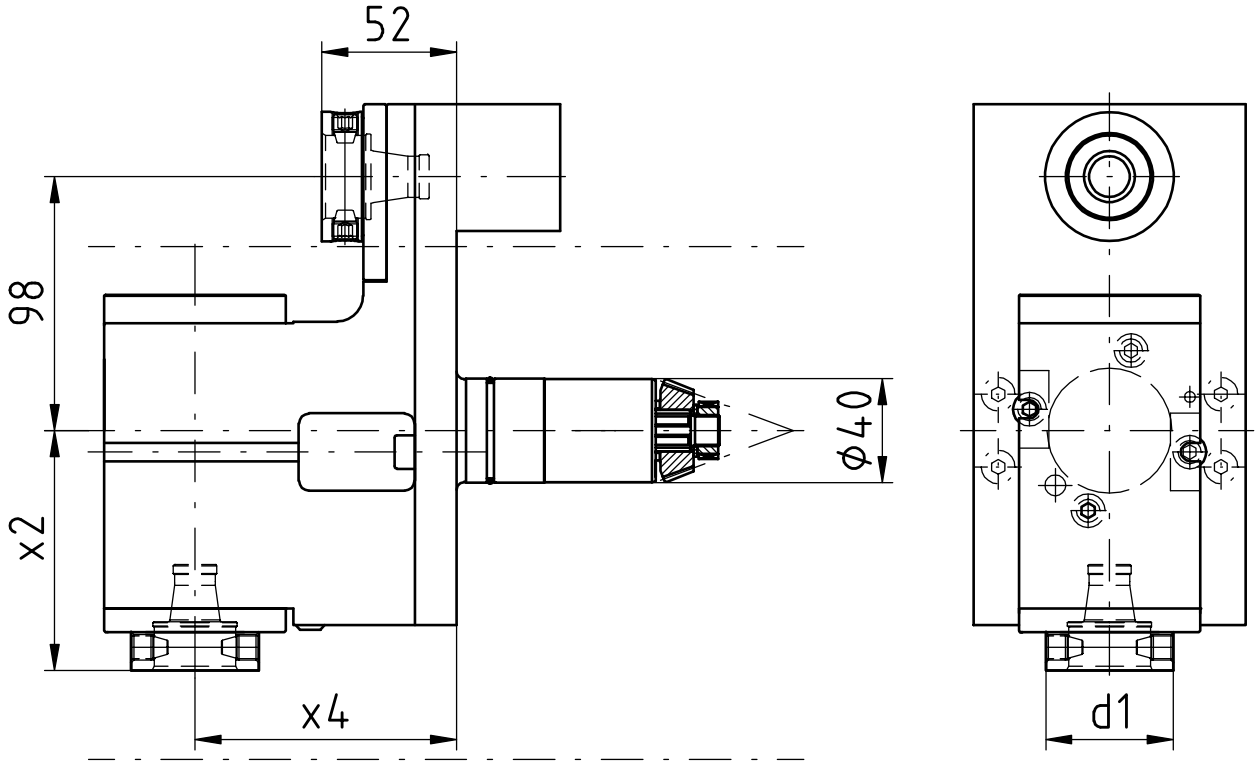


| [mm] | [mm] | [mm] | Spindle<br>Broche | [Nm] | [rpm] | | Outside cooling<br>Lubrificat. ext. | Internal cooling<br>Lubrificat. cent. | [bar] | Order no.<br>Nº de Code |
|---|---|---|---|---|---|---|---|---|---|---|
| **d1** | **x2** | **x4** | **Spindel** | **T max** | **n max** | **i** | **Aussenkühlung** | **Innenkühlung** | **p** | **Bestellnummer** |
| 50 | 92,5 | 101 | WFB 32-20 | 70 | 8.000 | 1:1 | x | | | MPU.Z40.B32.0A0.GITAL |
| 50 | 92,5 | 101 | WFB 32-20 | 70 | 8.000 | 1:1 | x | x | 80 | MPU.Z40.B32.0E0.GITAL |

| | |
|---|---|
| **Passend für Maschine:**<br>suitable machines:<br>approprié pour la machine: | Sprint 42l10 linear<br>Speed 32l10 linear |

# Modulare Aggregatetechnik

## Hanwha

# Katalog HA-02

# WFB-Adapterpool

Indications for the customer

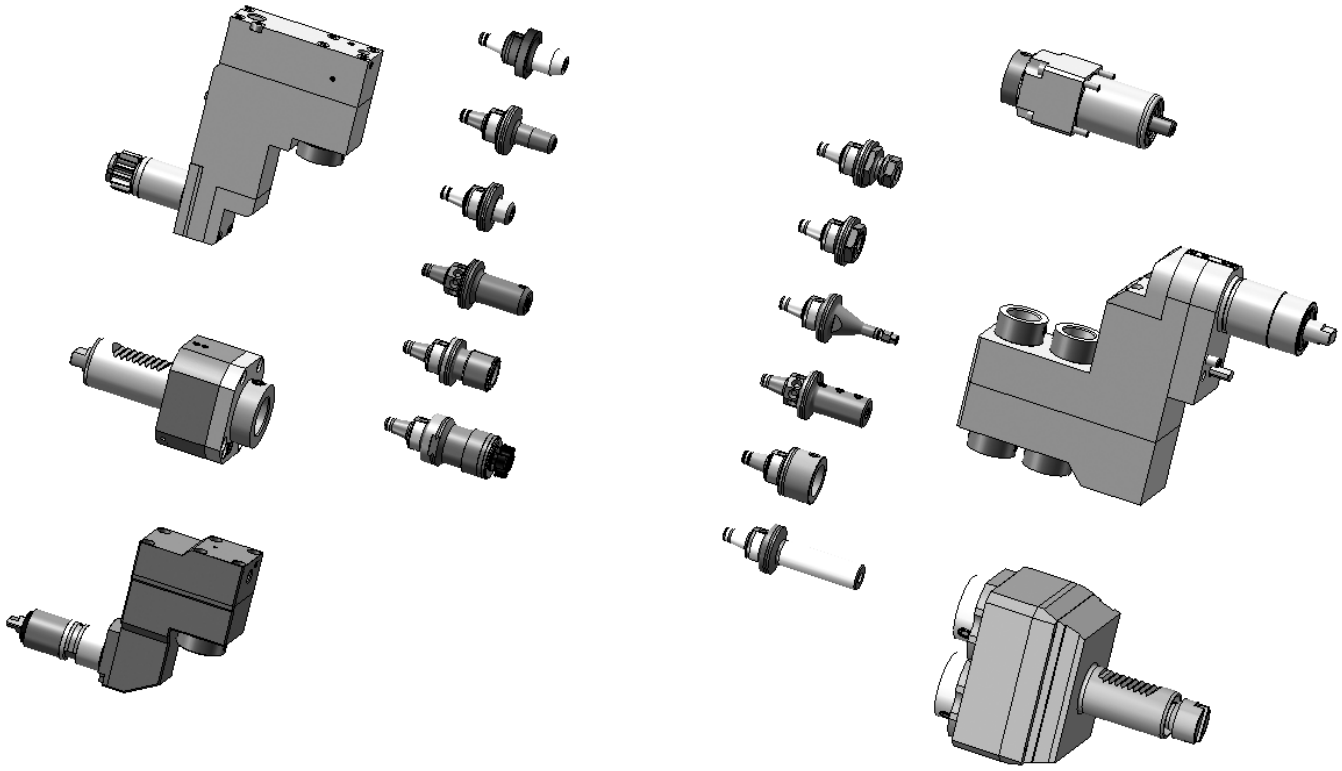

**Mit den Werkzeughaltern von W&F in statischer oder angetriebener Ausführung und dem WFB-Adaptersystem haben Sie die einzigartige Möglichkeit, für sämtliche Hersteller egal ob im Kurzdrehen, Langdrehen oder Mehrspindeldrehen ein durchgängiges modulares Werkzeugsystem einzusetzen.**

The W&F tool holders are in static or driven performance and beyond that, the WFB-adapter system offers you an unique option to use it for every machine manufacturer whether you are manufacturer producing with swiss type lathes, standard turning machines or multispindle turning machines, WFB is suitable.

# Hanwha

**Axial Bohr- und Fräskopf**
Axial drilling and milling head
Outil de perçage et de fraisage axiale

**WG 35**

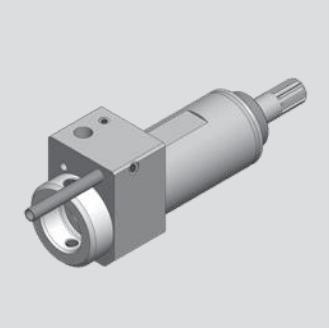

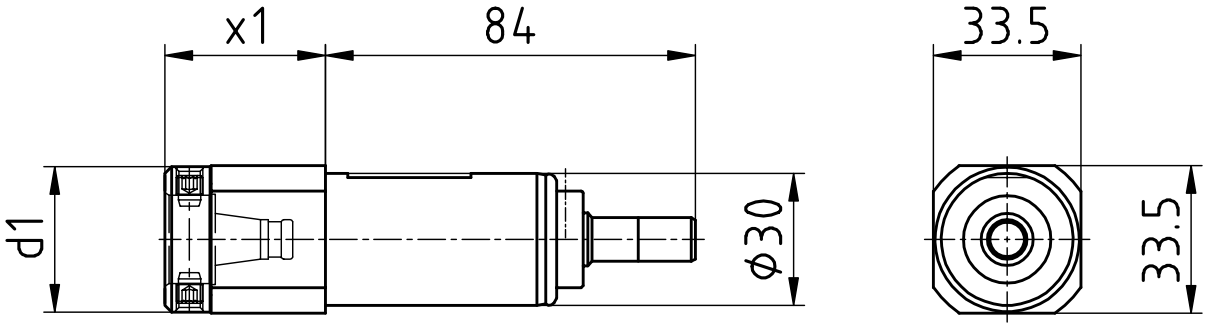


| [mm] | [mm] | Spindle<br>Broche | [Nm] | [rpm] | | Outside cooling<br>Lubrificat. ext. | Internal cooling<br>Lubrificat. cent. | [bar] | Order no.<br>Nº de Code |
|---|---|---|---|---|---|---|---|---|---|
| **d1** | **x1** | **Spindel** | **T max** | **n max** | **i** | **Aussenkühlung** | **Innenkühlung** | **p** | **Bestellnummer** |
| 33 | 36,5 | WFB 20-12 | 10 | 5.000 | 1:1 | | | | MPU.Z30.B20.AA0.XD20S |
| 33 | 36,5 | WFB 20-12 | 10 | 5.000 | 1:1 | x | x | 80 | MPU.Z30.B20.AE0.XD20S |

| | |
|---|---|
| **Passend für Maschine:**<br>suitable machines:<br>approprié pour la machine: | XD20<br>XD26 |

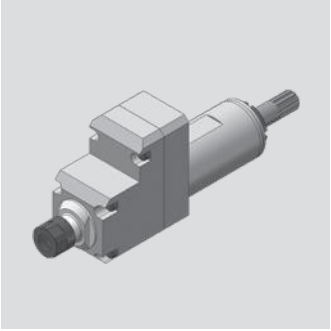

# Hanwha

**Axial Bohr- und Fräskopf**
Axial drilling and milling head
Outil de perçage et de fraisage axiale

**WG 35**

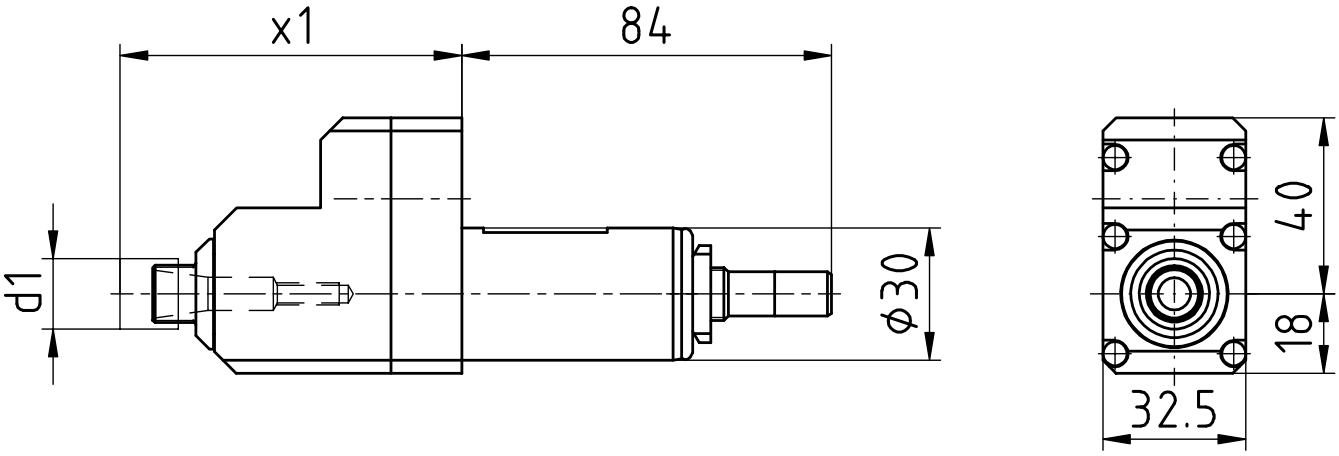


| [mm] | [mm] | Spindle<br>Broche | [Nm] | [rpm] | | Outside cooling<br>Lubrificat. ext. | Internal cooling<br>Lubrificat. cent. | [bar] | Order no.<br>Nº de Code |
|---|---|---|---|---|---|---|---|---|---|
| **d1** | **x1** | **Spindel** | **T max** | **n max** | **i** | **Aussenkühlung** | **Innenkühlung** | **p** | **Bestellnummer** |
| 16 | 77,6 | ER11 MINI | 3 | 15.000 | 1:3 | | | | MPU.Z30.E11.BA0.XD20 |

| | |
|---|---|
| **Passend für Maschine:**<br>suitable machines:<br>approprié pour la machine: | XD20<br>XD26 |

# Hanwha

**Axial Bohr- und Fräskopf**
Axial drilling and milling head
Outil de perçage et de fraisage axiale

**WG 35**

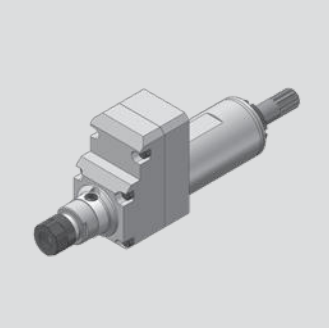

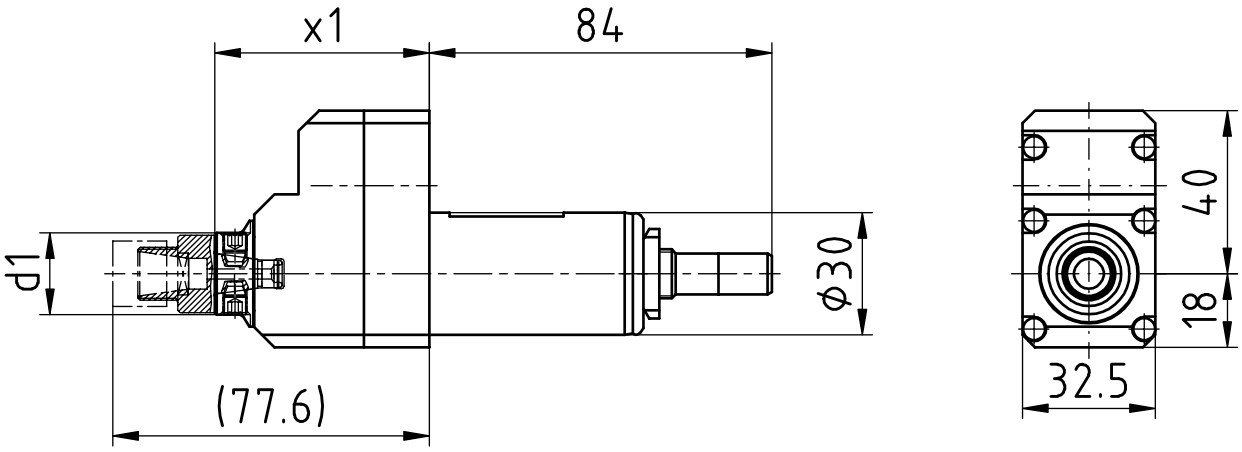


| [mm] | [mm] | Spindle<br>Broche | [Nm] | [rpm] | | Outside cooling<br>Lubrificat. ext. | Internal cooling<br>Lubrificat. cent. | [bar] | Order no.<br>Nº de Code |
|---|---|---|---|---|---|---|---|---|---|
| **d1** | **x1** | **Spindel** | **T max** | **n max** | **i** | **Aussenkühlung** | **Innenkühlung** | **p** | **Bestellnummer** |
| 20 | 52,6 | WF-Micro | 3 | 15.000 | 1:3 | | | | MPU.Z30.WFM.BA0.XD20 |

| | |
|---|---|
| **Passend für Maschine:**<br>suitable machines:<br>approprié pour la machine: | XD20<br>XD26 |

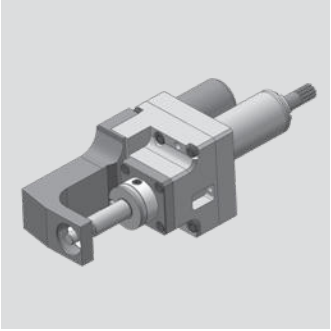

# Hanwha

**Axial Bohr- und Fräskopf**
Axial drilling and milling head
Outil de perçage et de fraisage axiale

**WG 35**

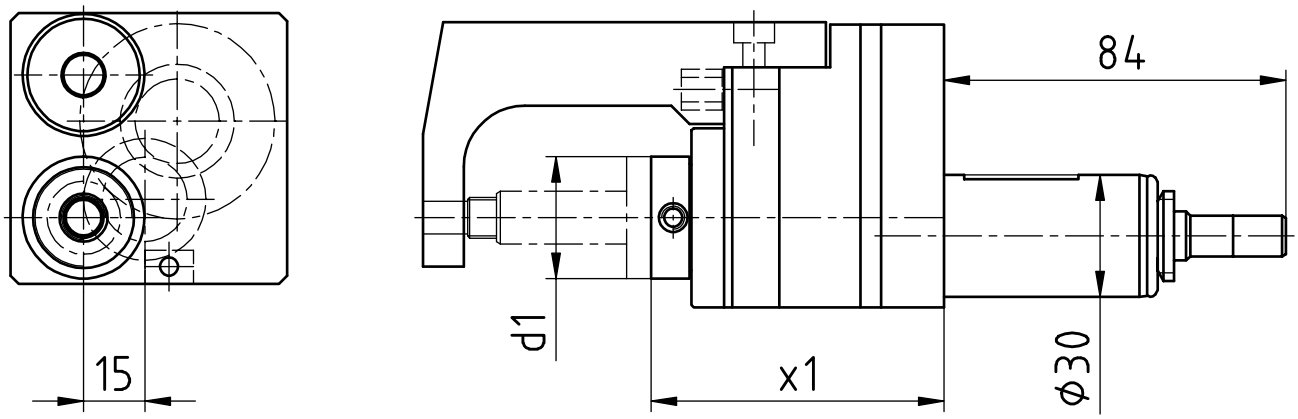


| [mm] | [mm] | Spindle<br>Broche | [Nm] | [rpm] | | Outside cooling<br>Lubrificat. ext. | Internal cooling<br>Lubrificat. cent. | [bar] | Order no.<br>Nº de Code |
|---|---|---|---|---|---|---|---|---|---|
| **d1** | **x1** | **Spindel** | **T max** | **n max** | **i** | **Aussenkühlung** | **Innenkühlung** | **p** | **Bestellnummer** |
| 30 | 72 | WFK 20-12 | 13 | 1.872 | 2,67:1 | | | | MPU.Z30.B20.CA0.XD20 |

| | |
|---|---|
| **Passend für Maschine:**<br>suitable machines:<br>approprié pour la machine: | XD20<br>XD26 |

# Hanwha

**Radial Bohr- und Fräskopf**
Radial drilling and milling head
Outil de perçage et de fraisage radiale

**WG 35**

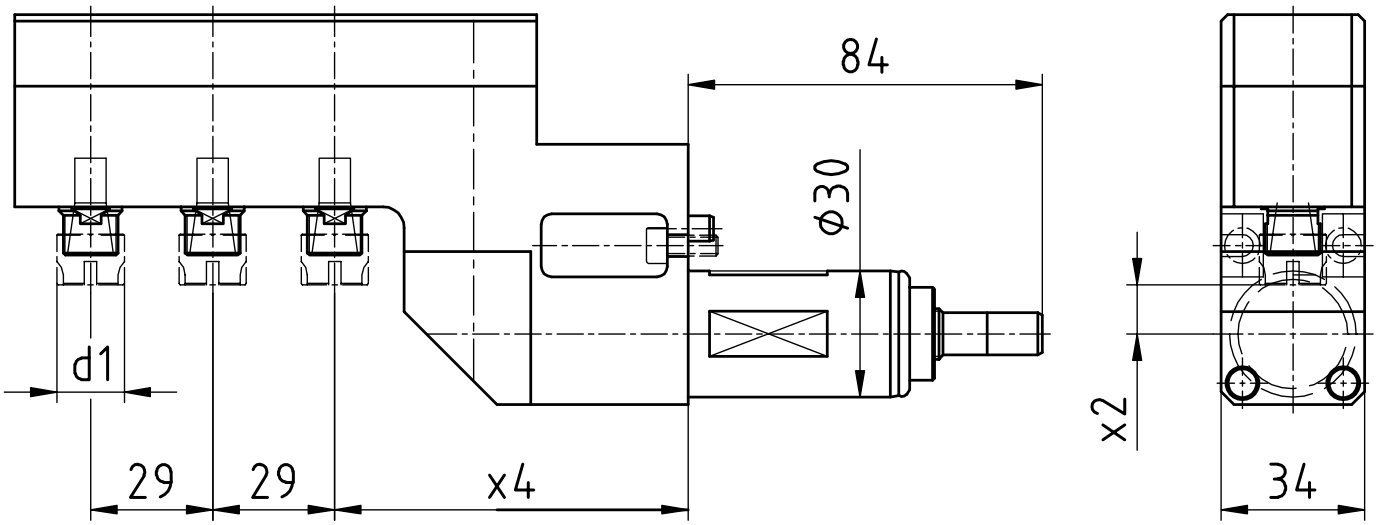


| [mm] | [mm] | [mm] | Spindle<br>Broche | [Nm] | [rpm] | | Outside cooling<br>Lubrificat. ext. | Internal cooling<br>Lubrificat. cent. | [bar] | Order no.<br>Nº de Code |
|---|---|---|---|---|---|---|---|---|---|---|
| **d1** | **x2** | **x4** | **Spindel** | **T max** | **n max** | **i** | **Aussenkühlung** | **Innenkühlung** | **p** | **Bestellnummer** |
| 16 | 11,7 | 84 | ER11 MINI | 3 | 5.000 | 1:1 | | | | MPU.Z30.E11.3A0.XD20 |

| | |
|---|---|
| **Passend für Maschine:**<br>suitable machines:<br>approprié pour la machine: | XD20<br>XD26 |

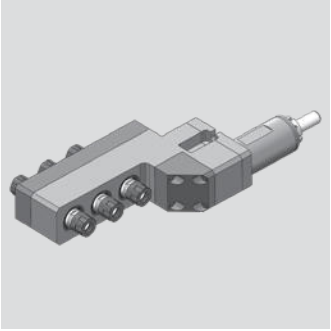

# Hanwha

**Radial Bohr- und Fräskopf**
Radial drilling and milling head
Outil de perçage et de fraisage radiale

**WG 35**

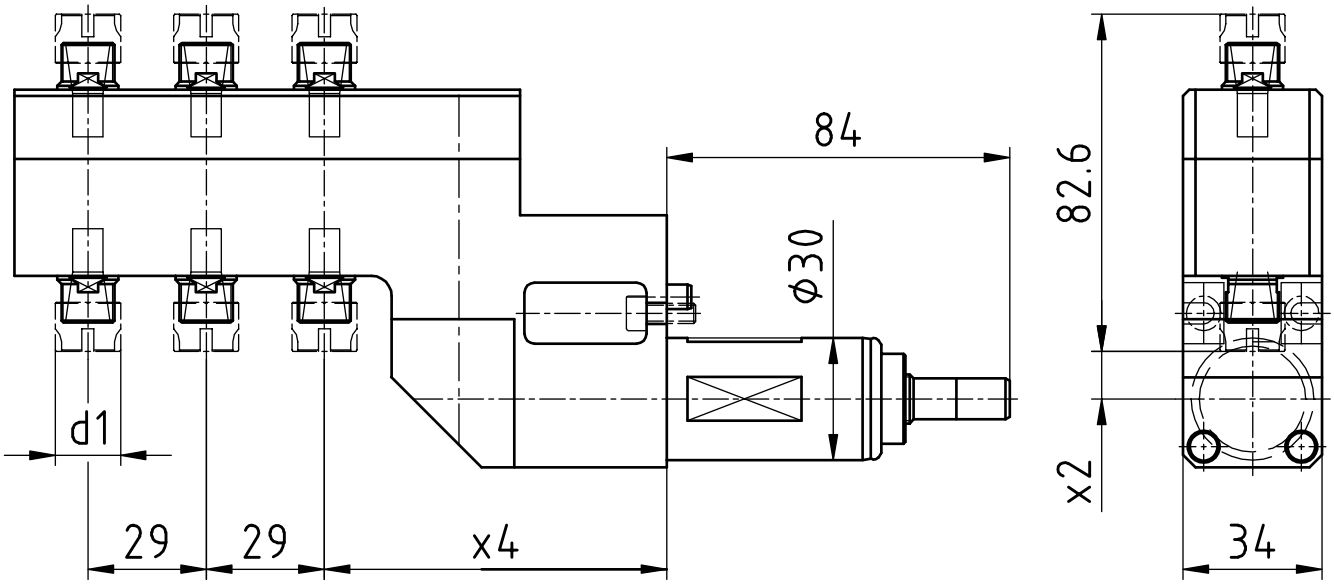


| [mm] | [mm] | [mm] | Spindle<br>Broche | [Nm] | [rpm] | | Outside cooling<br>Lubrificat. ext. | Internal cooling<br>Lubrificat. cent. | [bar] | Order no.<br>Nº de Code |
|---|---|---|---|---|---|---|---|---|---|---|
| **d1** | **x2** | **x4** | **Spindel** | **T max** | **n max** | **i** | **Aussenkühlung** | **Innenkühlung** | **p** | **Bestellnummer** |
| 16 | 11,7 | 84 | ER11 MINI | 3 | 5.000 | 1:1 | | | | MPU.Z30.E11.6A0.XD20 |

| | |
|---|---|
| **Passend für Maschine:**<br>suitable machines:<br>approprié pour la machine: | XD20<br>XD26 |

# Hanwha

**Axial Bohr- und Fräskopf**
Axial drilling and milling head
Outil de perçage et de fraisage axiale

**WG 35**

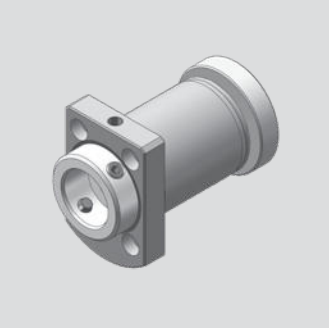

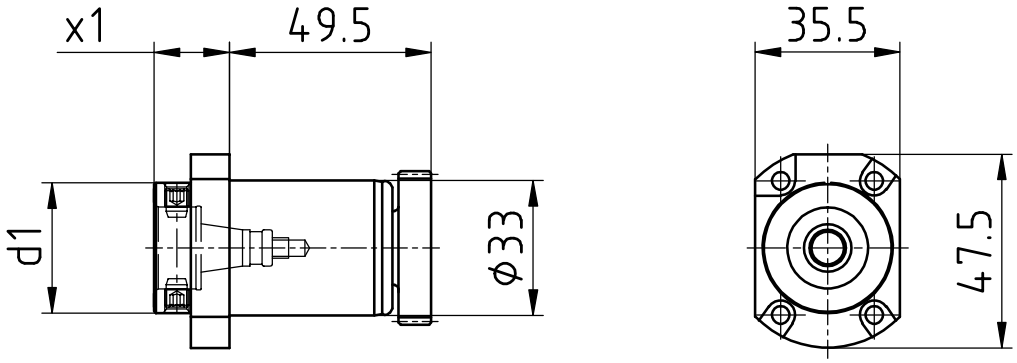


| [mm] | [mm] | Spindle<br>Broche | [Nm] | [rpm] | | Outside cooling<br>Lubrificat. ext. | Internal cooling<br>Lubrificat. cent. | [bar] | Order no.<br>Nº de Code |
|---|---|---|---|---|---|---|---|---|---|
| **d1** | **x1** | **Spindel** | **T max** | **n max** | **i** | **Aussenkühlung** | **Innenkühlung** | **p** | **Bestellnummer** |
| 33 | 18,5 | WFB 20-12 | 10 | 8.000 | 1:1 | | | | MPU.Z33.B20.AA0.XD20S |
| 33 | 18,5 | WFB 20-12 | 10 | 8.000 | 1:1 | x | x | 20 | MPU.Z33.B20.AE0.XD20S |

| | |
|---|---|
| **Passend für Maschine:**<br>suitable machines:<br>approprié pour la machine: | XD20<br>XD26 |

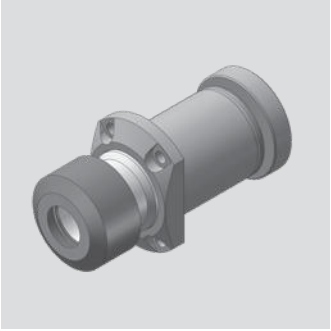

# Hanwha

**Axial Bohr- und Fräskopf**
Axial drilling and milling head
Outil de perçage et de fraisage axiale

**WG 35**

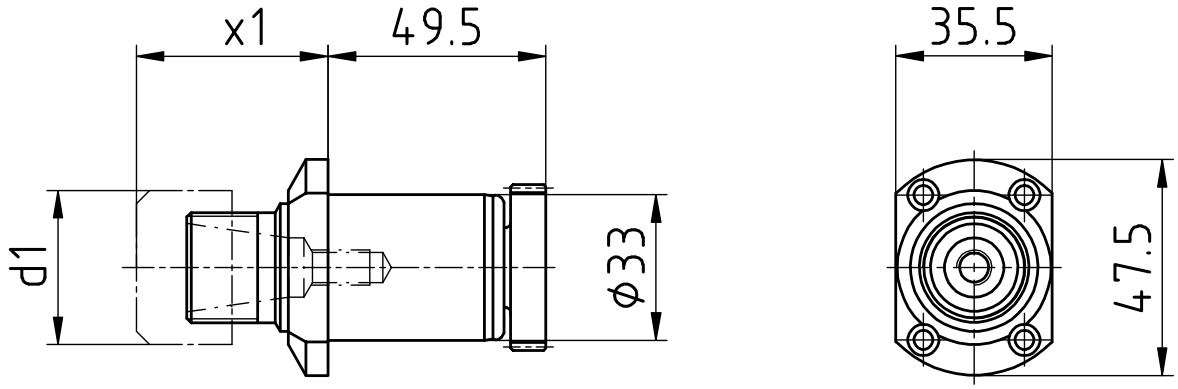


| [mm] | [mm] | Spindle<br>Broche | [Nm] | [rpm] | | Outside cooling<br>Lubrificat. ext. | Internal cooling<br>Lubrificat. cent. | [bar] | Order no.<br>Nº de Code |
|---|---|---|---|---|---|---|---|---|---|
| **d1** | **x1** | **Spindel** | **T max** | **n max** | **i** | **Aussenkühlung** | **Innenkühlung** | **p** | **Bestellnummer** |
| 35 | 43,5 | ER20 | 10 | 8.000 | 1:1 | | | | MPU.Z33.E20.AA0.XD20S |

| | |
|---|---|
| **Passend für Maschine:**<br>suitable machines:<br>approprié pour la machine: | XD20<br>XD26 |

# Hanwha

**Axial Bohr- und Fräskopf**
Axial drilling and milling head
Outil de perçage et de fraisage axiale

**WG 35**

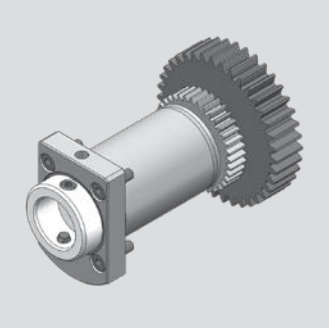

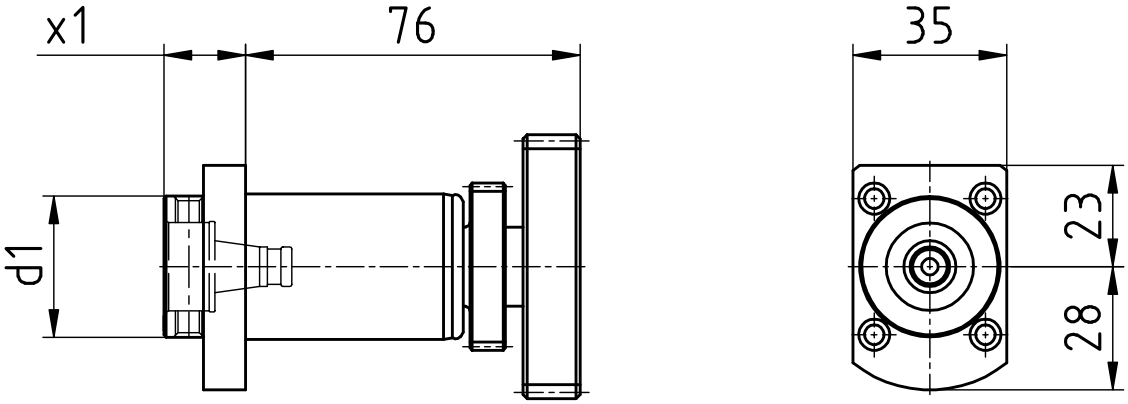


| [mm] | [mm] | Spindle<br>Broche | [Nm] | [rpm] | | Outside cooling<br>Lubrificat. ext. | Internal cooling<br>Lubrificat. cent. | [bar] | Order no.<br>Nº de Code |
|---|---|---|---|---|---|---|---|---|---|
| **d1** | **x1** | **Spindel** | **T max** | **n max** | **i** | **Aussenkühlung** | **Innenkühlung** | **p** | **Bestellnummer** |
| 32 | 18,5 | WFB 20-12 | 10 | 8.000 | 1:1 | | | | MPU.Z33.B20.AA0.XD20L1 |
| 32 | 18,5 | WFB 20-12 | 10 | 8.000 | 1:1 | x | x | 80 | MPU.Z33.B20.AE0.XD20L1 |

| | |
|---|---|
| **Passend für Maschine:**<br>suitable machines:<br>approprié pour la machine: | XD20<br>XD26 |

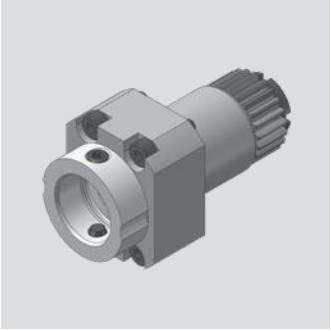

# Hanwha

**Axial Bohr- und Fräskopf**
Axial drilling and milling head
Outil de perçage et de fraisage axiale

**WG 35**

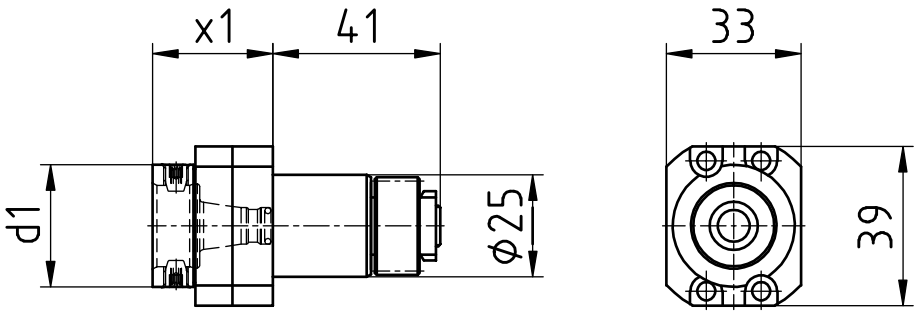


| [mm] | [mm] | Spindle<br>Broche | [Nm] | [rpm] | | Outside cooling<br>Lubrificat. ext. | Internal cooling<br>Lubrificat. cent. | [bar] | Order no.<br>Nº de Code |
|---|---|---|---|---|---|---|---|---|---|
| **d1** | **x1** | **Spindel** | **T max** | **n max** | **i** | **Aussenkühlung** | **Innenkühlung** | **p** | **Bestellnummer** |
| 30 | 29,5 | WFB 20-12 | 8 | 8.000 | 1:1 | | | | MPU.Z25.B20.AA0.XE20 |

| | |
|---|---|
| **Passend für Maschine:**<br>suitable machines:<br>approprié pour la machine: | XE20 |

# Hanwha

**Radial Bohr- und Fräskopf**
Radial drilling and milling head
Outil de perçage et de fraisage radiale

**WG 35**

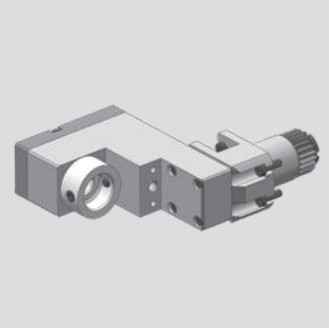

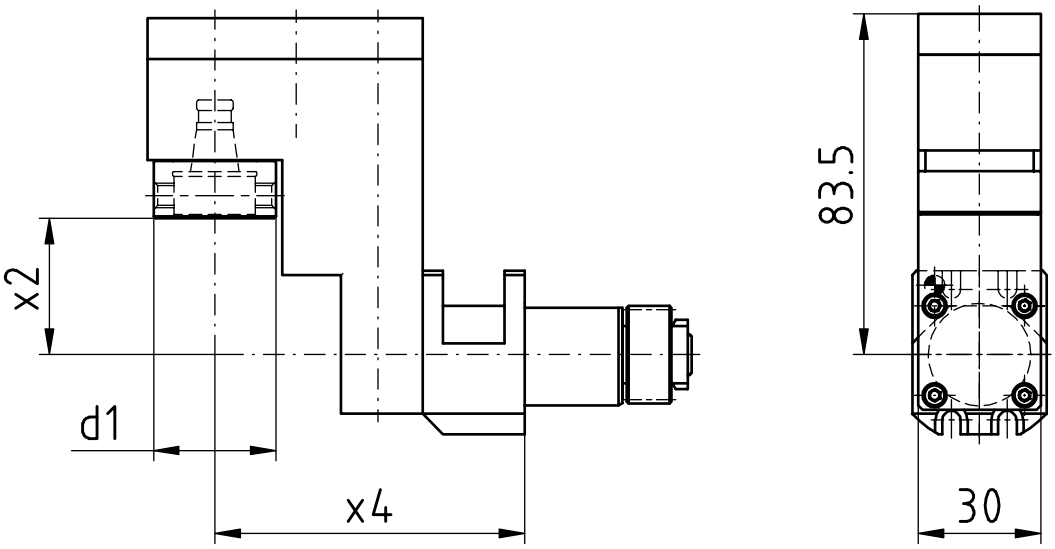


| [mm] | [mm] | [mm] | Spindle<br>Broche | [Nm] | [rpm] | | Outside cooling<br>Lubrificat. ext. | Internal cooling<br>Lubrificat. cent. | [bar] | Order no.<br>Nº de Code |
|---|---|---|---|---|---|---|---|---|---|---|
| **d1** | **x2** | **x4** | **Spindel** | **T max** | **n max** | **i** | **Aussenkühlung** | **Innenkühlung** | **p** | **Bestellnummer** |
| 30 | 33,4 | 76 | WFB 20-12 | 10 | 8.000 | 1:1 | | | | MPU.Z25.B20.VA0.XD20V |

| | |
|---|---|
| **Passend für Maschine:**<br>suitable machines:<br>approprié pour la machine: | XD20V |

# Hanwha

**Axial Bohr- und Fräskopf**
Axial drilling and milling head
Outil de perçage et de fraisage axiale

**WG 35**

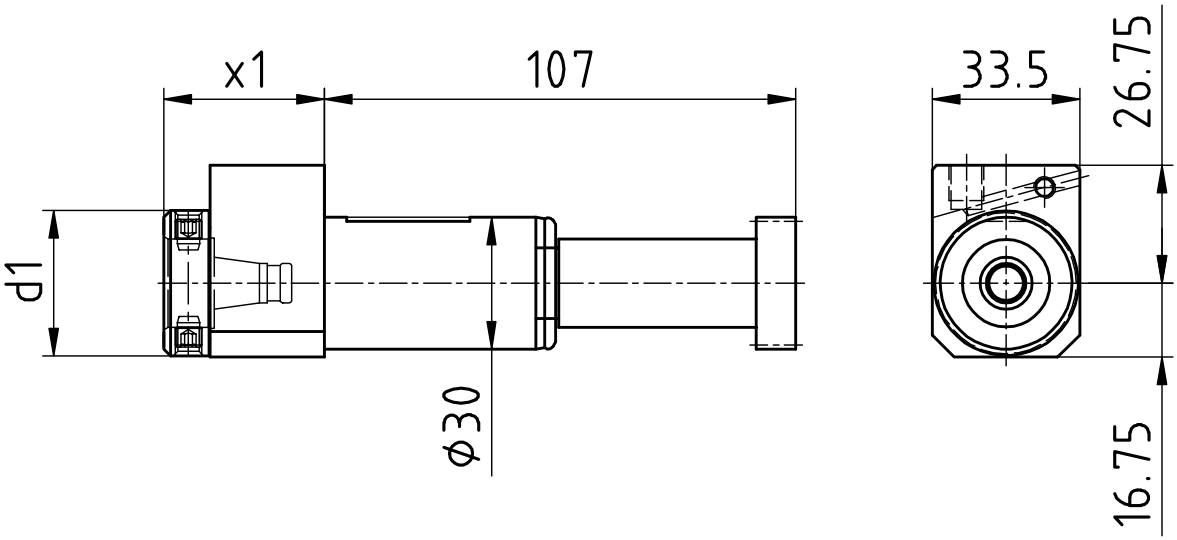


| [mm] | [mm] | Spindle<br>Broche | [Nm] | [rpm] | | Outside cooling<br>Lubrificat. ext. | Internal cooling<br>Lubrificat. cent. | [bar] | Order no.<br>Nº de Code |
|---|---|---|---|---|---|---|---|---|---|
| **d1** | **x1** | **Spindel** | **T max** | **n max** | **i** | **Aussenkühlung** | **Innenkühlung** | **p** | **Bestellnummer** |
| 33 | 36,5 | WFB 20-12 | 10 | 5.000 | 1:1 | x | x | 80 | MPU.Z30.B20.AE0.XE20 |

| | |
|---|---|
| **Passend für Maschine:**<br>suitable machines:<br>approprié pour la machine: | XE20 |

# Hanwha

**Axial Bohr- und Fräskopf**
Axial drilling and milling head
Outil de perçage et de fraisage axiale

**WG 35**

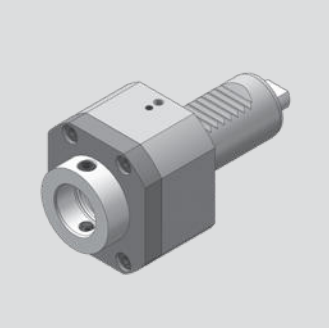

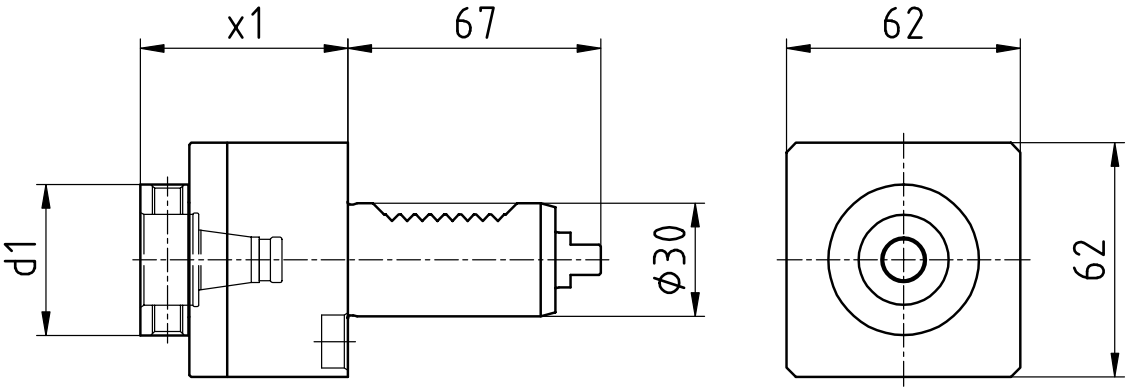


| [mm] | [mm] | Spindle<br>Broche | [Nm] | [rpm] | | Outside cooling<br>Lubrificat. ext. | Internal cooling<br>Lubrificat. cent. | [bar] | Order no.<br>Nº de Code |
|---|---|---|---|---|---|---|---|---|---|
| **d1** | **x1** | **Spindel** | **T max** | **n max** | **i** | **Aussenkühlung** | **Innenkühlung** | **p** | **Bestellnummer** |
| 40 | 55 | WFB 24-16 | 10 | 8.000 | 1:1 | x | | | MPU.M30.B24.AA0.STL |
| 40 | 55 | WFB 24-16 | 10 | 8.000 | 1:1 | x | x | 80 | MPU.M30.B24.AE0.STL |

| | |
|---|---|
| **Passend für Maschine:**<br>suitable machines:<br>approprié pour la machine: | STL |

# Hanwha

**Axial Bohr- und Fräskopf**
Axial drilling and milling head
Outil de perçage et de fraisage axiale

**WG 35**

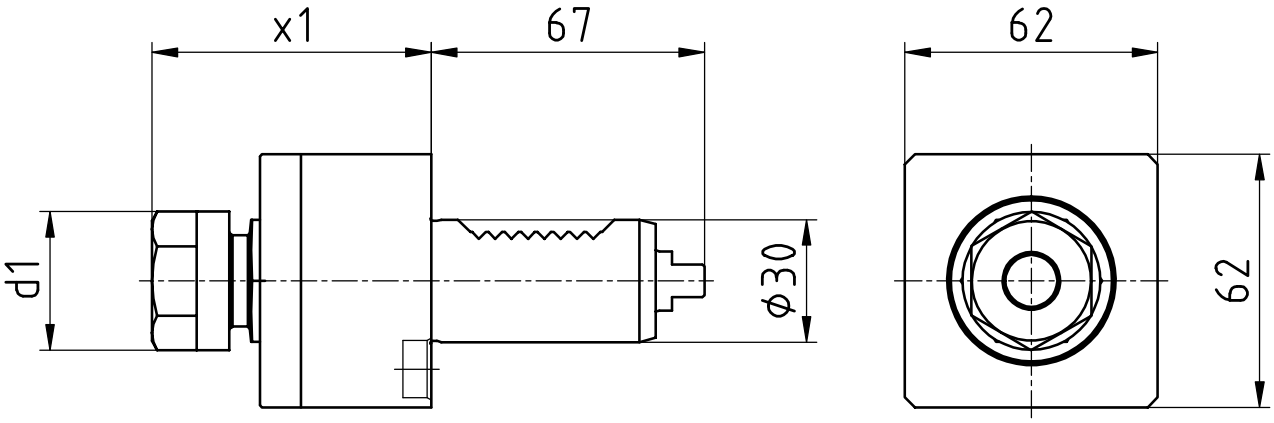


| [mm] | [mm] | Spindle<br>Broche | [Nm] | [rpm] | | Outside cooling<br>Lubrificat. ext. | Internal cooling<br>Lubrificat. cent. | [bar] | Order no.<br>Nº de Code |
|---|---|---|---|---|---|---|---|---|---|
| **d1** | **x1** | **Spindel** | **T max** | **n max** | **i** | **Aussenkühlung** | **Innenkühlung** | **p** | **Bestellnummer** |
| 34 | 68,5 | ER20 | 10 | 8.000 | 1:1 | x | | | MPU.M30.E20.AA0.STL |

| | |
|---|---|
| **Passend für Maschine:**<br>suitable machines:<br>approprié pour la machine: | STL |

# Modulare Aggregatetechnik

## Maier

**Katalog MA-02**

# WFB-Adapterpool

Indications for the customer

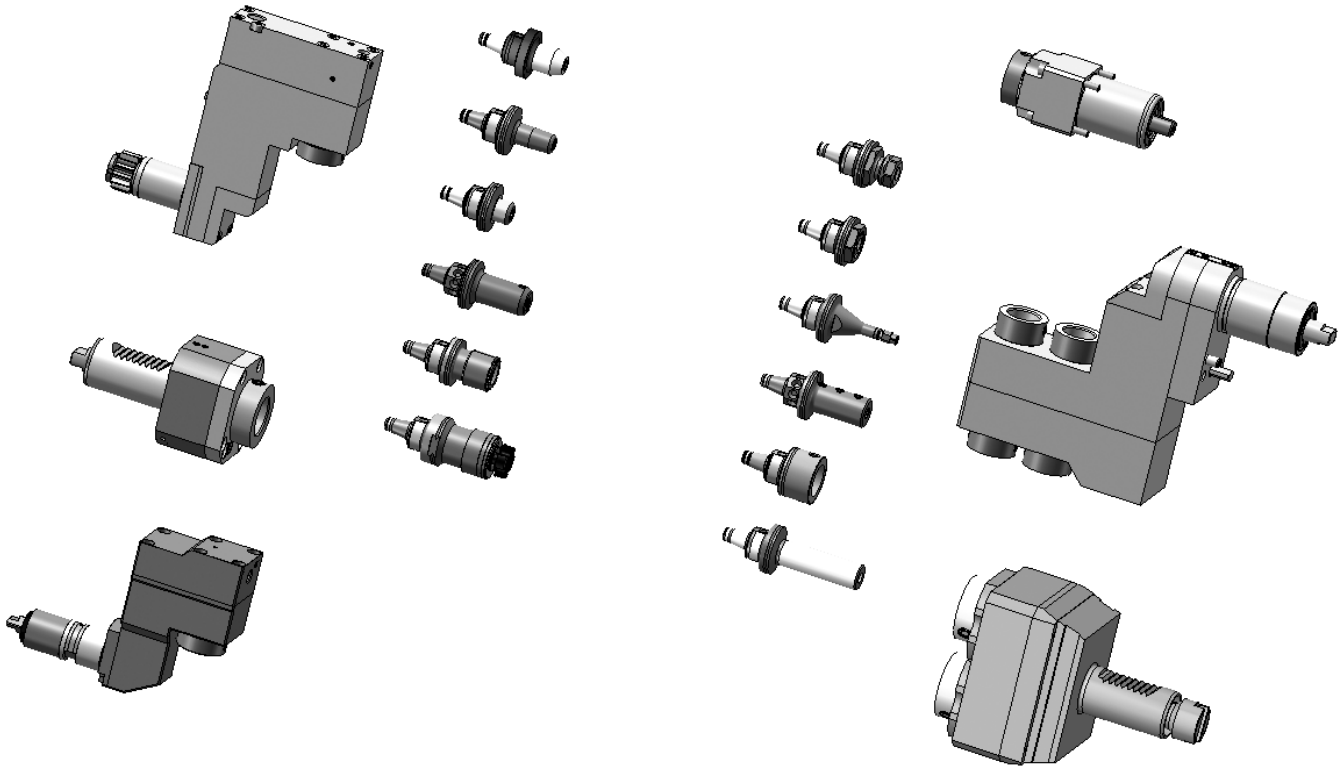

**Mit den Werkzeughaltern von W&F in statischer oder angetriebener Ausführung und dem WFB-Adaptersystem haben Sie die einzigartige Möglichkeit, für sämtliche Hersteller egal ob im Kurzdrehen, Langdrehen oder Mehrspindeldrehen ein durchgängiges modulares Werkzeugsystem einzusetzen.**

The W&F tool holders are in static or driven performance and beyond that, the WFB-adapter system offers you an unique option to use it for every machine manufacturer whether you are manufacturer producing with swiss type lathes, standard turning machines or multispindle turning machines, WFB is suitable.

# Maier

**Axial Bohr- und Fräskopf**
Axial drilling and milling head
Outil de perçage et de fraisage axiale

**WG 35**

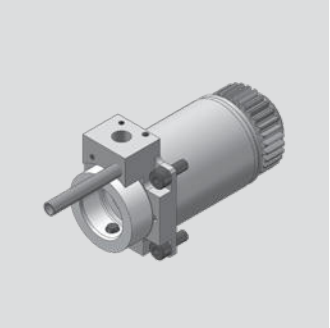

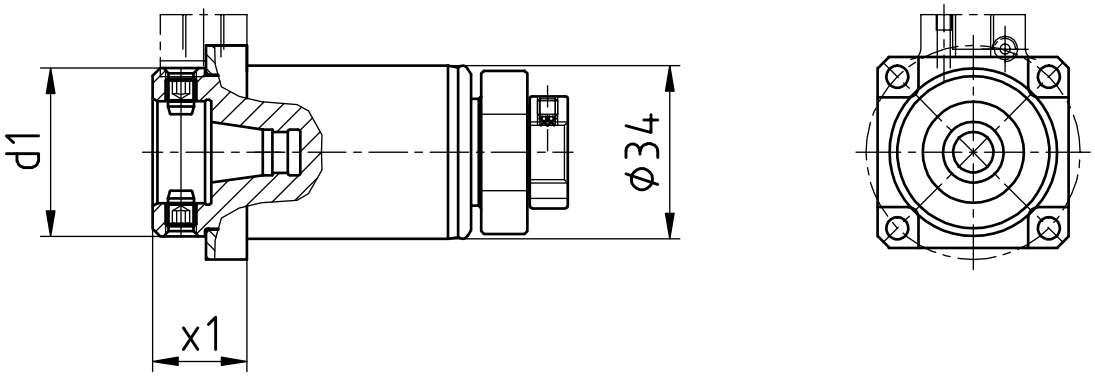


| [mm] | [mm] | Spindle<br>Broche | [Nm] | [rpm] | | Outside cooling<br>Lubrificat. ext. | Internal cooling<br>Lubrificat. cent. | [bar] | Order no.<br>Nº de Code |
|---|---|---|---|---|---|---|---|---|---|
| **d1** | **x1** | **Spindel** | **T max** | **n max** | **i** | **Aussenkühlung** | **Innenkühlung** | **p** | **Bestellnummer** |
| 33 | 18,5 | WFB 20-12 | 10 | 10.000 | 1:1 | | | | MPU.Z34.B20.AA0.MAIS |
| 33 | 18,5 | WFB 20-12 | 10 | 10.000 | 1:1 | x | x | 80 | MPU.Z34.B20.AE0.MAIS |

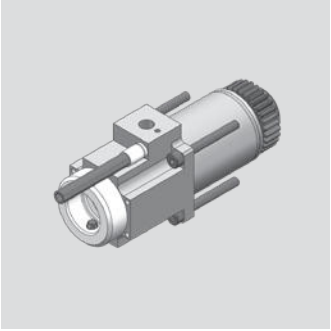

# Maier

**Axial Bohr- und Fräskopf**
Axial drilling and milling head
Outil de perçage et de fraisage axiale

**WG 35**

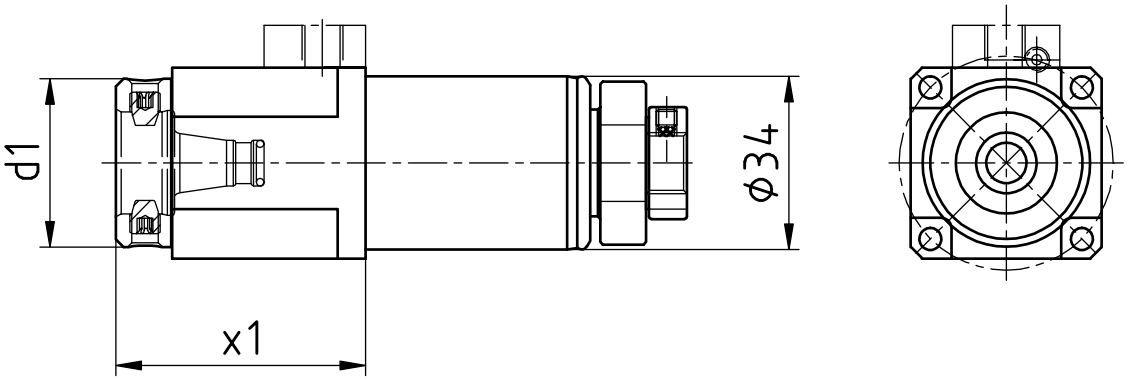


| [mm] | [mm] | Spindle<br>Broche | [Nm] | [rpm] | | Outside cooling<br>Lubrificat. ext. | Internal cooling<br>Lubrificat. cent. | [bar] | Order no.<br>Nº de Code |
|---|---|---|---|---|---|---|---|---|---|
| **d1** | **x1** | **Spindel** | **T max** | **n max** | **i** | **Aussenkühlung** | **Innenkühlung** | **p** | **Bestellnummer** |
| 33 | 50 | WFB 20-12 | 10 | 10.000 | 1:1 | | | | MPU.Z34.B20.AA0.2131S |
| 33 | 50 | WFB 20-12 | 10 | 10.000 | 1:1 | x | x | 80 | MPU.Z34.B20.AE0.2131S |

# Maier

**Axial Bohr- und Fräskopf**
Axial drilling and milling head
Outil de perçage et de fraisage axiale

**WG 35**

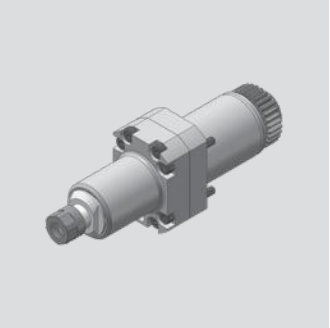

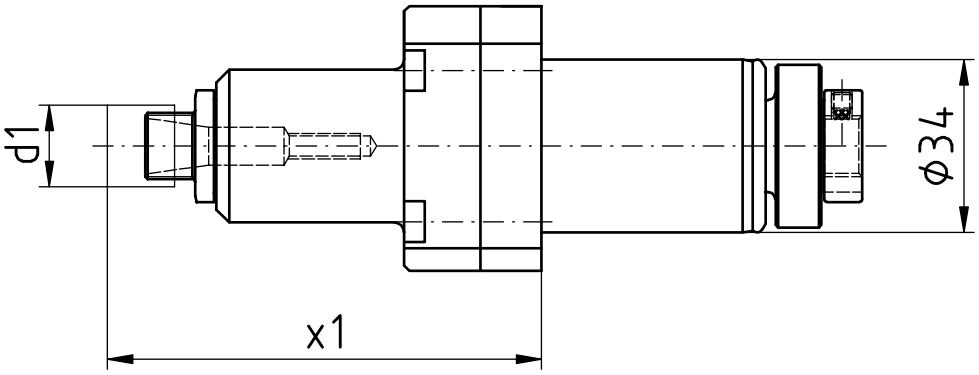


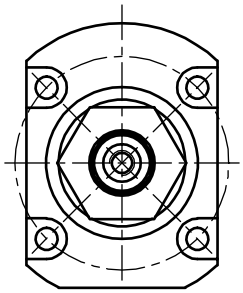

| [mm] | [mm] | Spindle<br>Broche | [Nm] | [rpm] | | Outside cooling<br>Lubrificat. ext. | Internal cooling<br>Lubrificat. cent. | [bar] | Order no.<br>Nº de Code |
|---|---|---|---|---|---|---|---|---|---|
| **d1** | **x1** | **Spindel** | **T max** | **n max** | **i** | **Aussenkühlung** | **Innenkühlung** | **p** | **Bestellnummer** |
| 16 | 85,4 | ER11 MINI | 3 | 24.000 | 1:2,4 | | | | MPU.Z34.E11.BA0.MAIS |

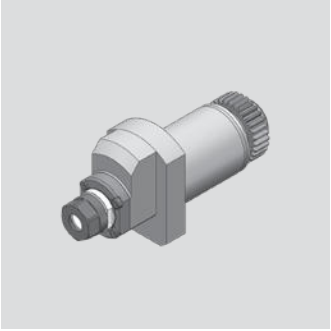

# Maier

**Axial Bohr- und Fräskopf**
Axial drilling and milling head
Outil de perçage et de fraisage axiale

**WG 35**

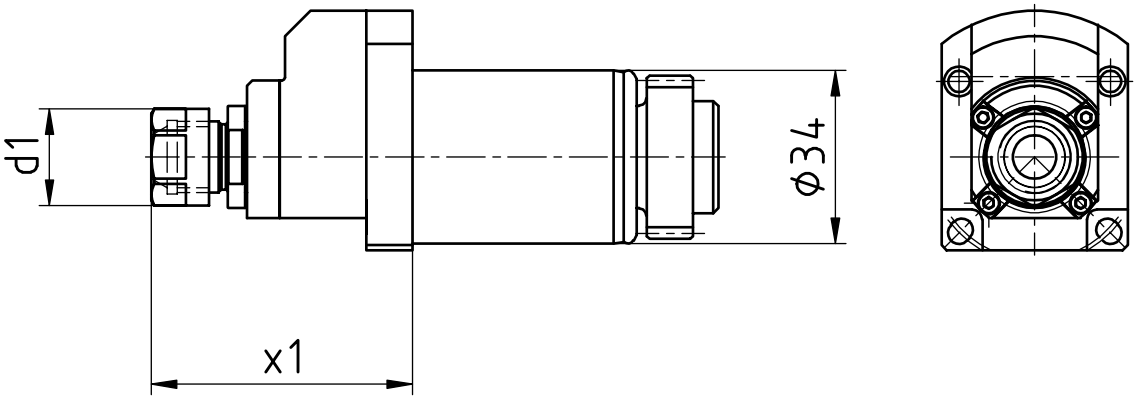


| [mm] | [mm] | Spindle<br>Broche | [Nm] | [rpm] | | Outside cooling<br>Lubrificat. ext. | Internal cooling<br>Lubrificat. cent. | [bar] | Order no.<br>Nº de Code |
|---|---|---|---|---|---|---|---|---|---|
| **d1** | **x1** | **Spindel** | **T max** | **n max** | **i** | **Aussenkühlung** | **Innenkühlung** | **p** | **Bestellnummer** |
| 19 | 51,2 | ER11 | 2 | 32.000 | 1:4 | | | | MPU.Z34.E11.BA0.MAIS4 |

# Maier

**Axial Bohr- und Fräskopf**
Axial drilling and milling head
Outil de perçage et de fraisage axiale

**WG 35**

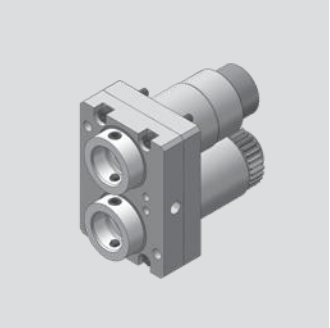

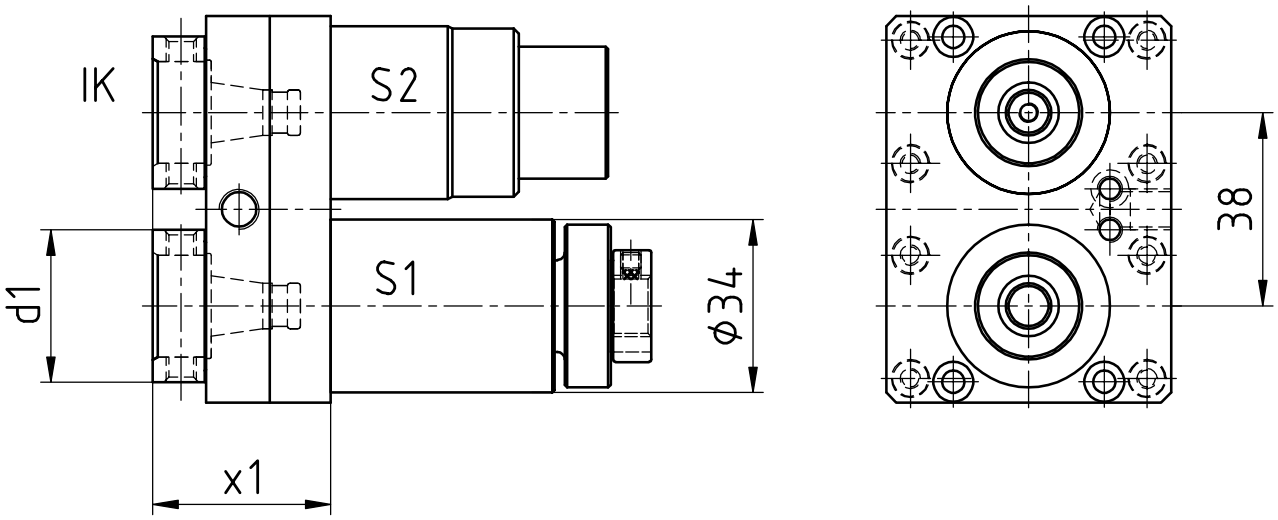


| [mm] | [mm] | Spindle<br>Broche | [Nm] | [rpm] | | Outside cooling<br>Lubrificat. ext. | Internal cooling<br>Lubrificat. cent. | [bar] | Order no.<br>Nº de Code |
|---|---|---|---|---|---|---|---|---|---|
| **d1** | **x1** | **Spindel** | **T max** | **n max** | **i** | **Aussenkühlung** | **Innenkühlung** | **p** | **Bestellnummer** |
| 30 | 35 | WFB 20-12 | 10* | 10.000* | 1:1* | x | x | 80 | MPU.Z34.B20.ME0.MAIS |

* S1: 10 Nm/10.000 rpm/i=1:1
S2: 7 Nm/15.000 rpm/i=1:1,5

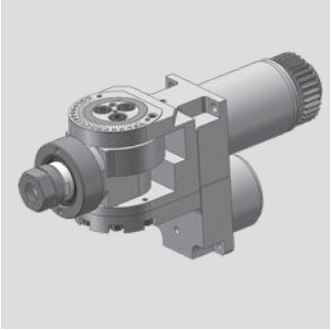

# Maier

**Bohr- und Fräskopf winkelverstellbar**
Drilling and milling swivel head
Outil de perçage et de fraisage tournant

**WG 35**

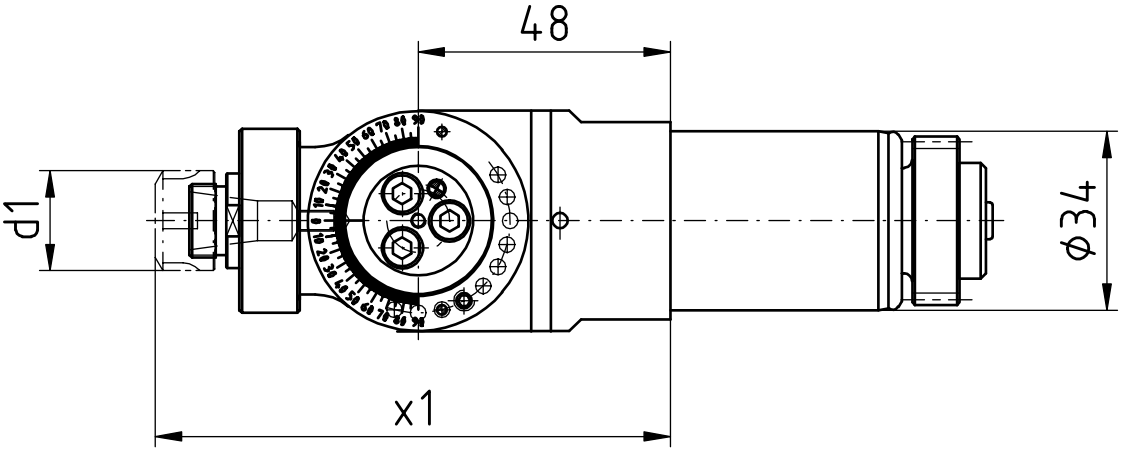


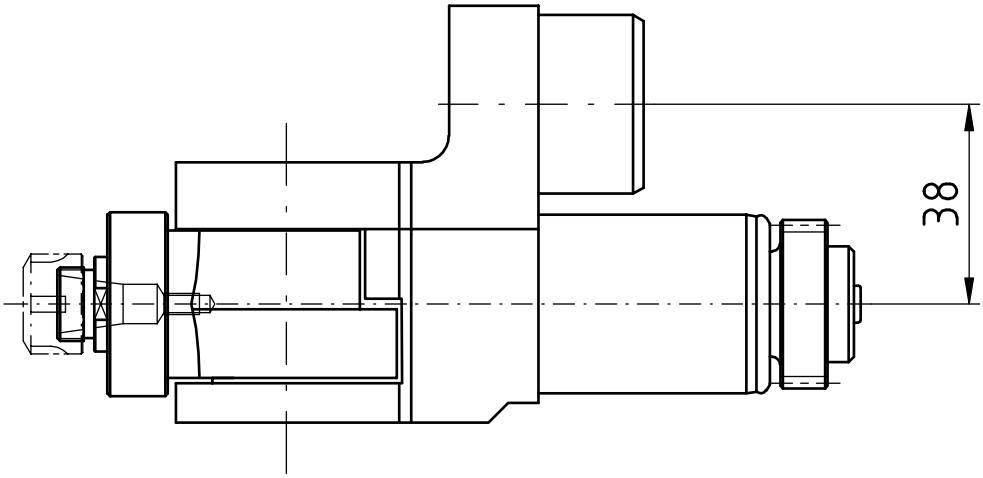


| [mm] | [mm] | Spindle<br>Broche | [Nm] | [rpm] | | Outside cooling<br>Lubrificat. ext. | Internal cooling<br>Lubrificat. cent. | [bar] | Order no.<br>Nº de Code |
|---|---|---|---|---|---|---|---|---|---|
| **d1** | **x1** | **Spindel** | **T max** | **n max** | **i** | **Aussenkühlung** | **Innenkühlung** | **p** | **Bestellnummer** |
| 19 | 98 | ER11 | 5 | 10.000 | 1:1 | | | | MPU.Z34.E11.SA0.MAIS |

# Maier

**Radial Bohr- und Fräskopf**
Radial drilling and milling head
Outil de perçage et de fraisage radiale

**WG 35**

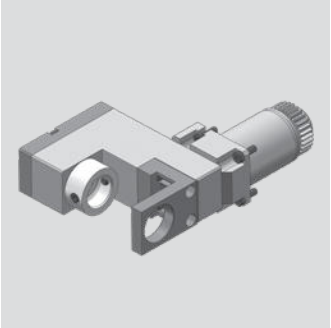

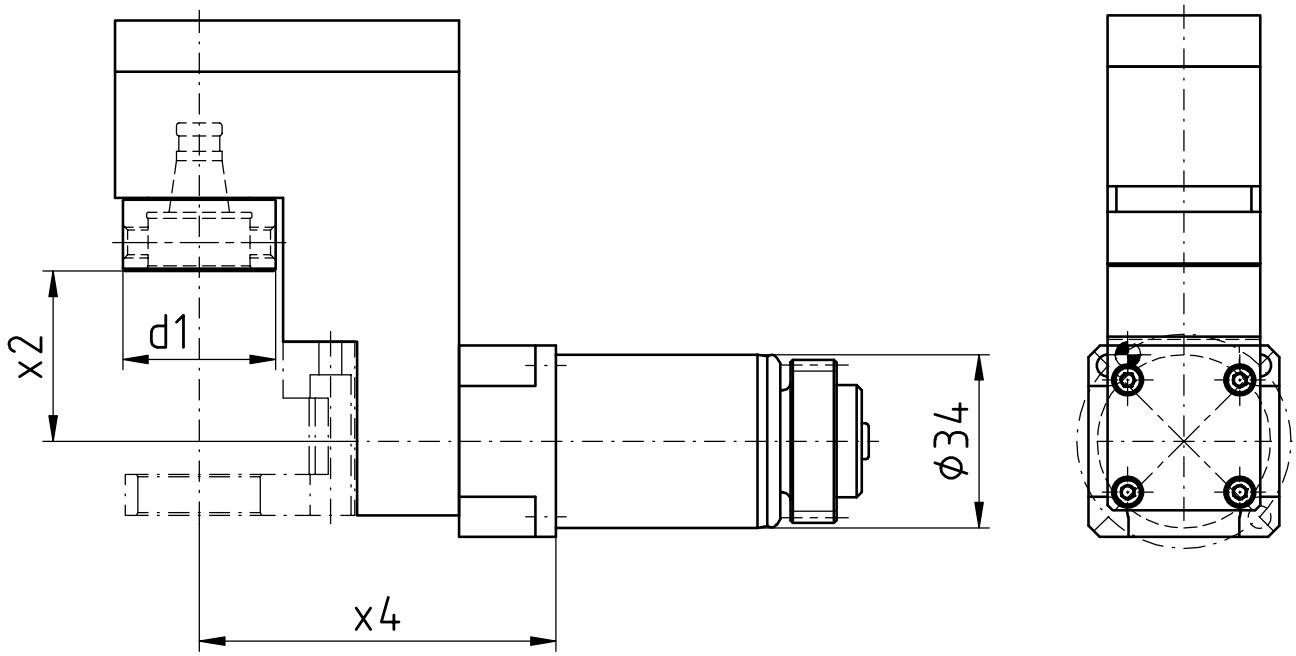


| [mm] | [mm] | [mm] | Spindle<br>Broche | [Nm] | [rpm] | | Outside cooling<br>Lubrificat. ext. | Internal cooling<br>Lubrificat. cent. | [bar] | Order no.<br>Nº de Code |
|---|---|---|---|---|---|---|---|---|---|---|
| **d1** | **x2** | **x4** | **Spindel** | **T max** | **n max** | **i** | **Aussenkühlung** | **Innenkühlung** | **p** | **Bestellnummer** |
| 30 | 33,4 | 70 | WFB 20-12 | 6 | 10.000 | 1:1 | | | | MPU.Z34.B20.VA0.MAIS |

# Maier

**Axial Bohr- und Fräskopf**
Axial drilling and milling head
Outil de perçage et de fraisage axiale

**WG 35**

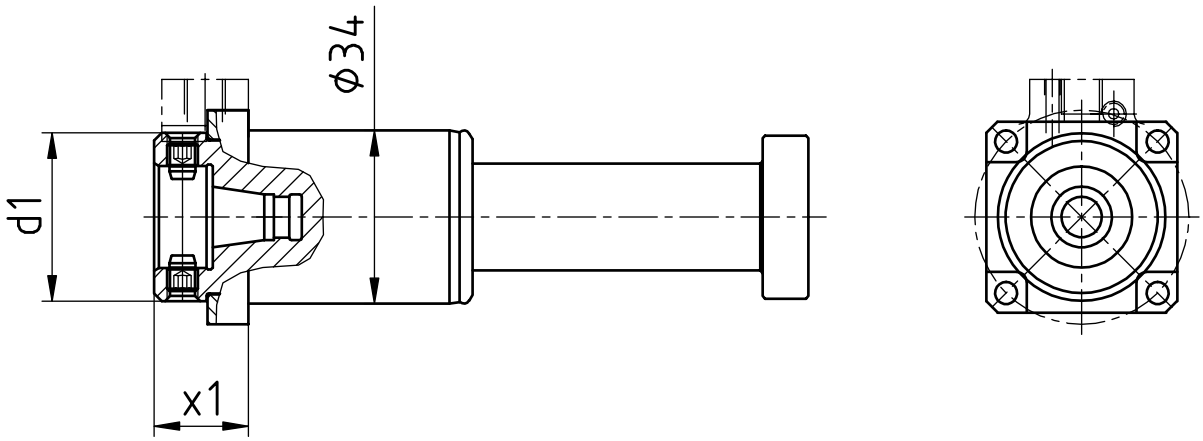


| [mm] | [mm] | Spindle<br>Broche | [Nm] | [rpm] | | Outside cooling<br>Lubrificat. ext. | Internal cooling<br>Lubrificat. cent. | [bar] | Order no.<br>Nº de Code |
|---|---|---|---|---|---|---|---|---|---|
| **d1** | **x1** | **Spindel** | **T max** | **n max** | **i** | **Aussenkühlung** | **Innenkühlung** | **p** | **Bestellnummer** |
| 33 | 18,5 | WFB 20-12 | 10 | 10.000 | 1:1 | | | | MPU.Z34.B20.AA0.MAISL |
| 33 | 18,5 | WFB 20-12 | 10 | 10.000 | 1:1 | x | x | 80 | MPU.Z34.B20.AE0.MAISL |

# Maier

**Axial Bohr- und Fräskopf**
Axial drilling and milling head
Outil de perçage et de fraisage axiale

**WG 35**

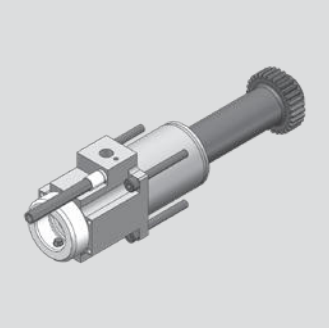

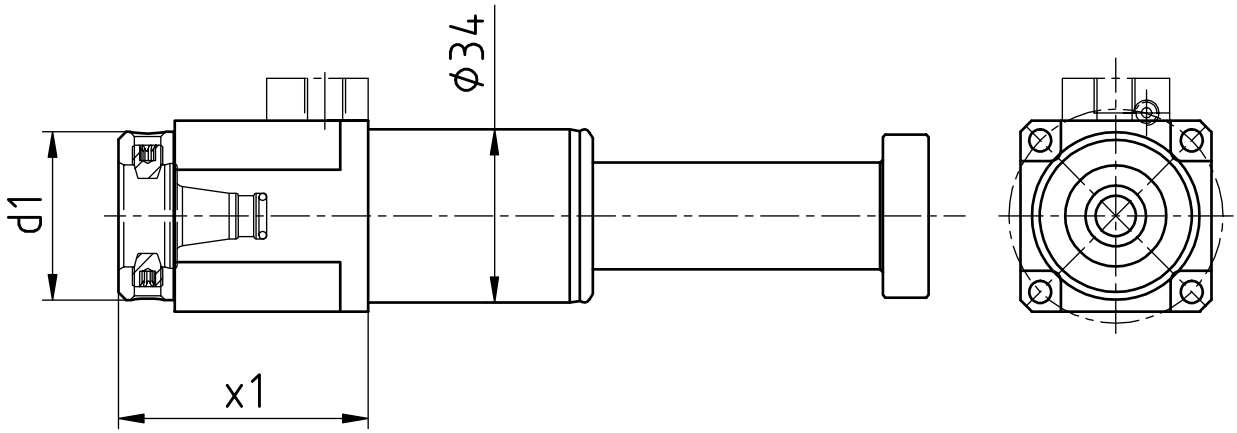


| [mm] | [mm] | Spindle<br>Broche | [Nm] | [rpm] | | Outside cooling<br>Lubrificat. ext. | Internal cooling<br>Lubrificat. cent. | [bar] | Order no.<br>Nº de Code |
|---|---|---|---|---|---|---|---|---|---|
| **d1** | **x1** | **Spindel** | **T max** | **n max** | **i** | **Aussenkühlung** | **Innenkühlung** | **p** | **Bestellnummer** |
| 33 | 50 | WFB 20-12 | 10 | 10.000 | 1:1 | | | | MPU.Z34.B20.AA0.2131SL |
| 33 | 50 | WFB 20-12 | 10 | 10.000 | 1:1 | x | x | 80 | MPU.Z34.B20.AE0.2131SL |

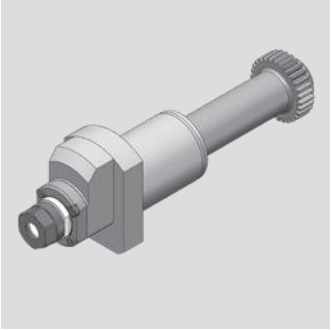

# Maier

**Axial Bohr- und Fräskopf**
Axial drilling and milling head
Outil de perçage et de fraisage axiale

**WG 35**

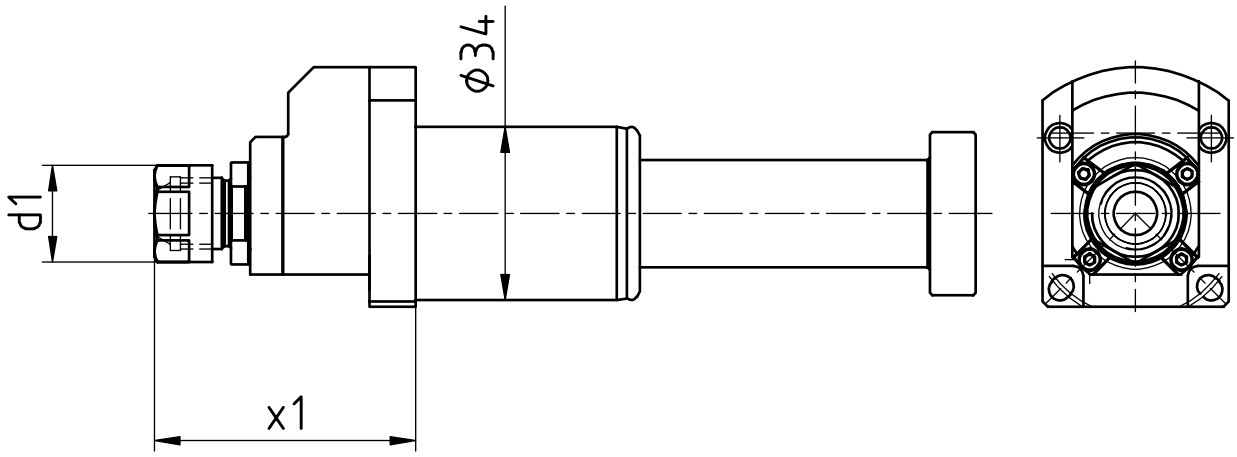


| [mm] | [mm] | Spindle<br>Broche | [Nm] | [rpm] | | Outside cooling<br>Lubrificat. ext. | Internal cooling<br>Lubrificat. cent. | [bar] | Order no.<br>Nº de Code |
|---|---|---|---|---|---|---|---|---|---|
| **d1** | **x1** | **Spindel** | **T max** | **n max** | **i** | **Aussenkühlung** | **Innenkühlung** | **p** | **Bestellnummer** |
| 19 | 51,2 | ER11 | 2 | 32.000 | 1:4 | | | | MPU.Z34.E11.BA0.MAISL4 |

# Maier

**Bohr- und Fräskopf winkelverstellbar**
Drilling and milling swivel head
Outil de perçage et de fraisage tournant

**WG 35**

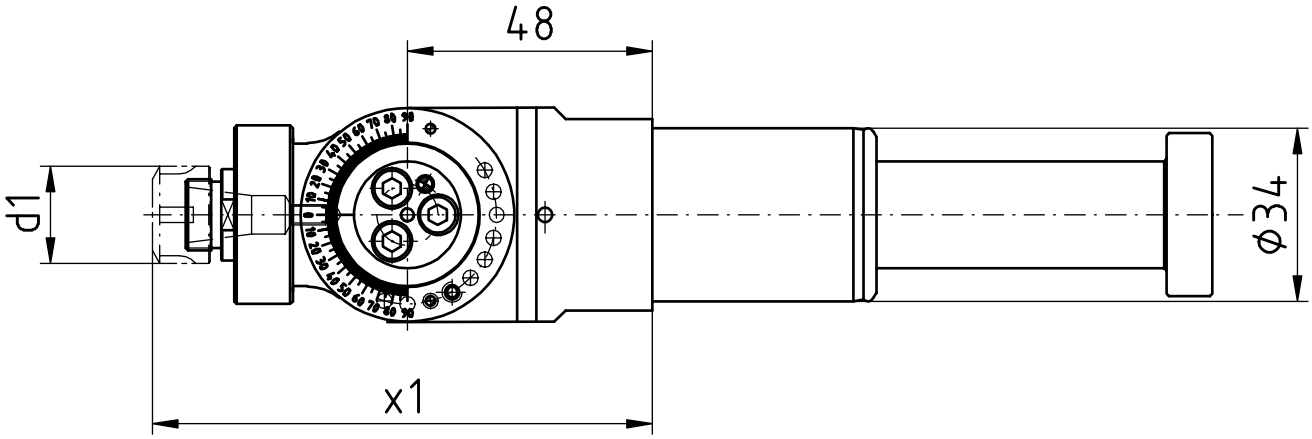


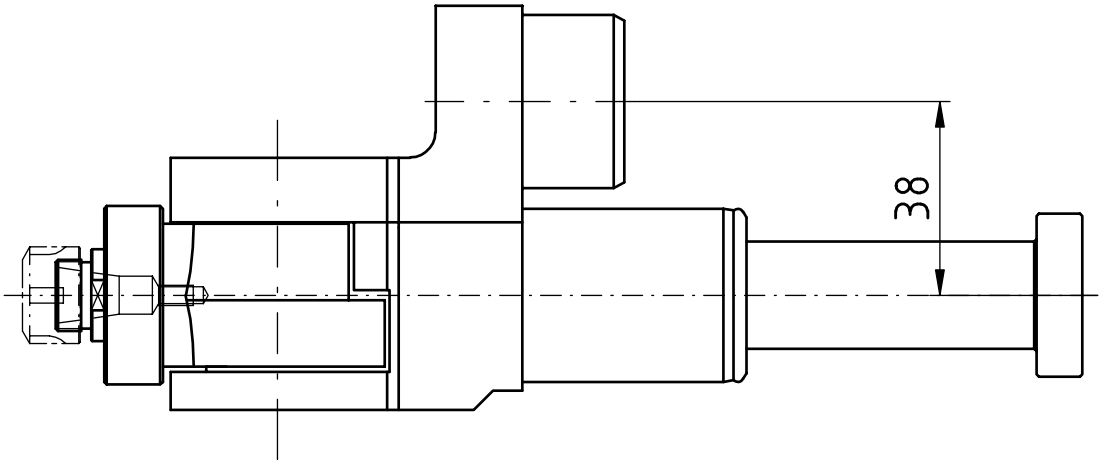


| [mm] | [mm] | Spindle | [Nm] | [rpm] | | Outside cooling | Internal cooling | [bar] | Order no. |
|---|---|---|---|---|---|---|---|---|---|
| | | Broche | | | | Lubrificat. ext. | Lubrificat. cent. | | Nº de Code |
| **d1** | **x1** | **Spindel** | **T max** | **n max** | **i** | **Aussenkühlung** | **Innenkühlung** | **p** | **Bestellnummer** |
| 19 | 98 | ER11 | 5 | 10.000 | 1:1 | | | | MPU.Z34.E11.SA0.MAISL |

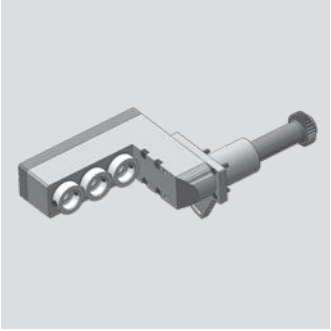

# Maier

**Radial Bohr- und Fräskopf**
Radial drilling and milling head
Outil de perçage et de fraisage radiale

**WG 35**

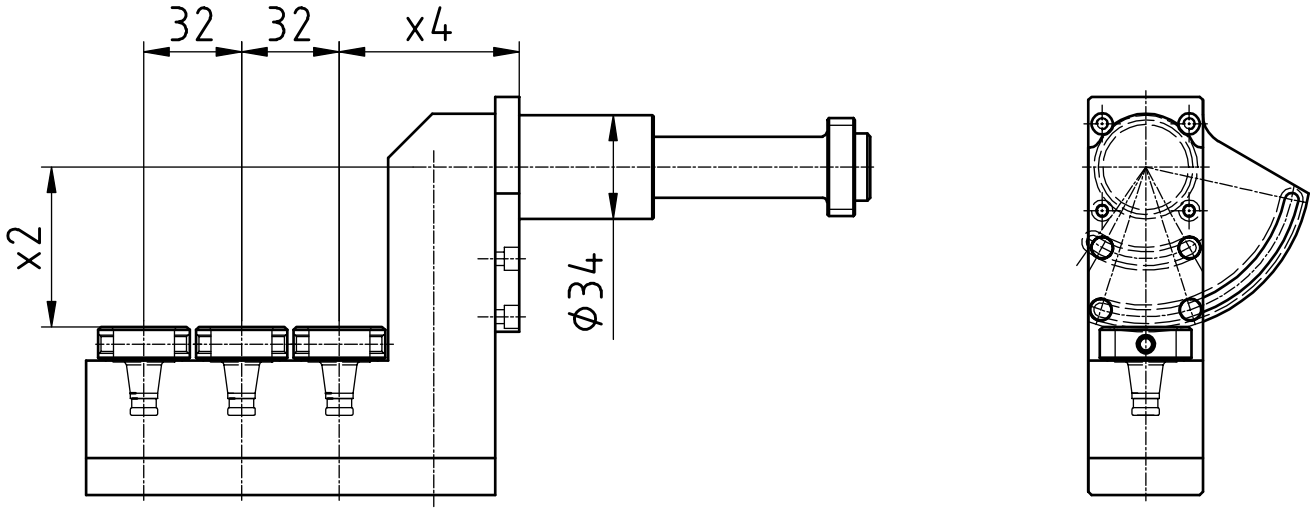


| [mm] | [mm] | [mm] | Spindle<br>Broche | [Nm] | [rpm] | | Outside cooling<br>Lubrificat. ext. | Internal cooling<br>Lubrificat. cent. | [bar] | Order no.<br>Nº de Code |
|---|---|---|---|---|---|---|---|---|---|---|
| **d1** | **x2** | **x4** | **Spindel** | **T max** | **n max** | **i** | **Aussenkühlung** | **Innenkühlung** | **p** | **Bestellnummer** |
| 30 | 52,3 | 59 | WFB 20-12 | 3 | 10.000 | 1:1 | | | | MPU.Z34.B20.3A0.MAISL |

# Maier

**Radial Bohr- und Fräskopf**
Radial drilling and milling head
Outil de perçage et de fraisage radiale

**WG 35**

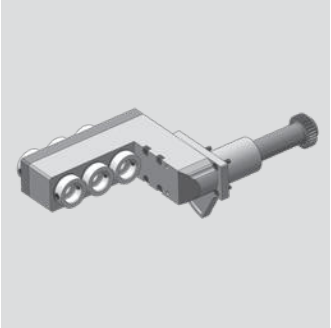

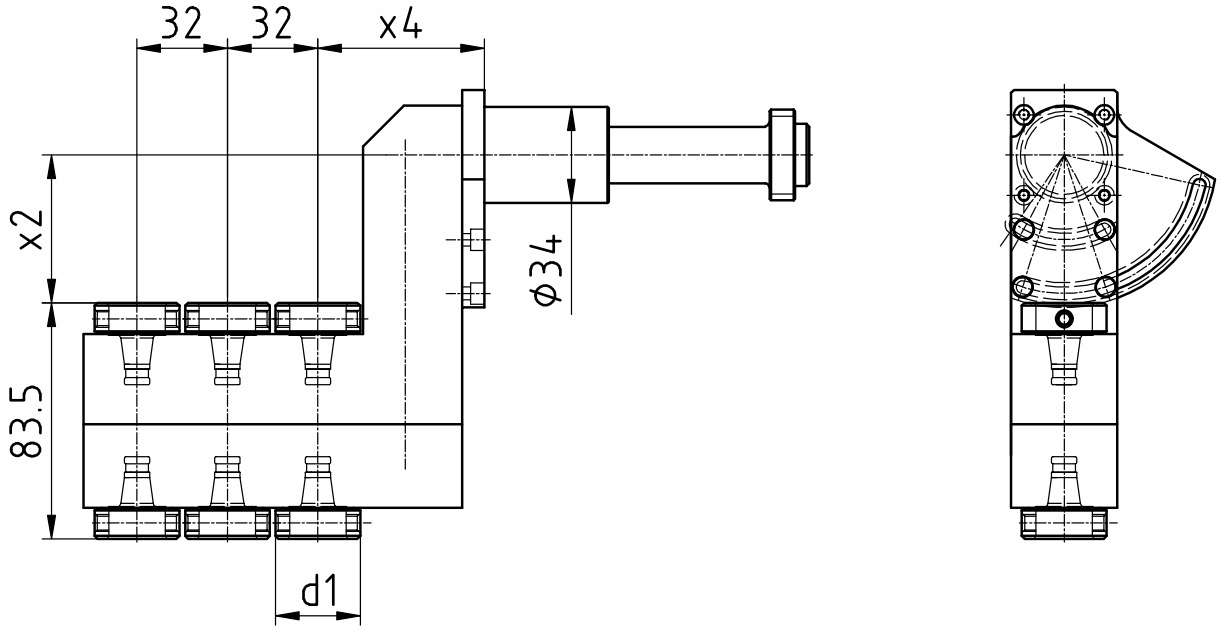


| [mm] | [mm] | [mm] | Spindle<br>Broche | [Nm] | [rpm] | | Outside cooling<br>Lubrificat. ext. | Internal cooling<br>Lubrificat. cent. | [bar] | Order no.<br>Nº de Code |
|---|---|---|---|---|---|---|---|---|---|---|
| **d1** | **x2** | **x4** | **Spindel** | **T max** | **n max** | **i** | **Aussenkühlung** | **Innenkühlung** | **p** | **Bestellnummer** |
| 30 | 52,3 | 59 | WFB 20-12 | 3 | 10.000 | 1:1 | | | | MPU.Z34.B20.6A0.MAISL |

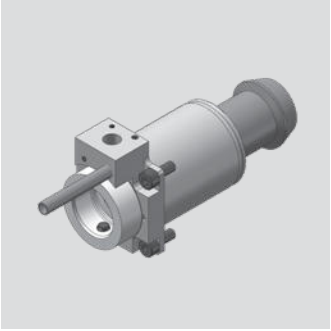

# Maier

**Axial Bohr- und Fräskopf**
Axial drilling and milling head
Outil de perçage et de fraisage axiale

**WG 35**

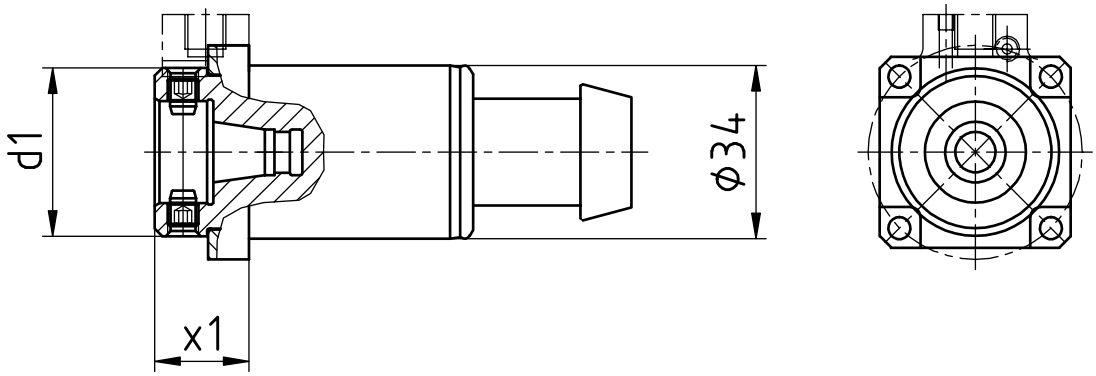


| [mm] | [mm] | Spindle<br>Broche | [Nm] | [rpm] | | Outside cooling<br>Lubrificat. ext. | Internal cooling<br>Lubrificat. cent. | [bar] | Order no.<br>Nº de Code |
|---|---|---|---|---|---|---|---|---|---|
| **d1** | **x1** | **Spindel** | **T max** | **n max** | **i** | **Aussenkühlung** | **Innenkühlung** | **p** | **Bestellnummer** |
| 33 | 18,5 | WFB 20-12 | 10 | 10.000 | 1:1 | | | | MPU.Z34.B20.AA0.MAIK |
| 33 | 18,5 | WFB 20-12 | 10 | 10.000 | 1:1 | x | x | 80 | MPU.Z34.B20.AE0.MAIK |

# Maier

**Axial Bohr- und Fräskopf**
Axial drilling and milling head
Outil de perçage et de fraisage axiale

**WG 35**

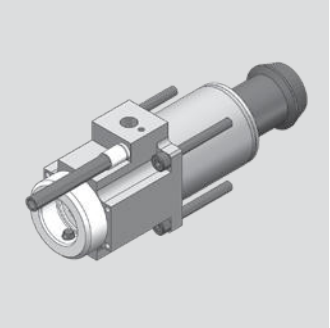

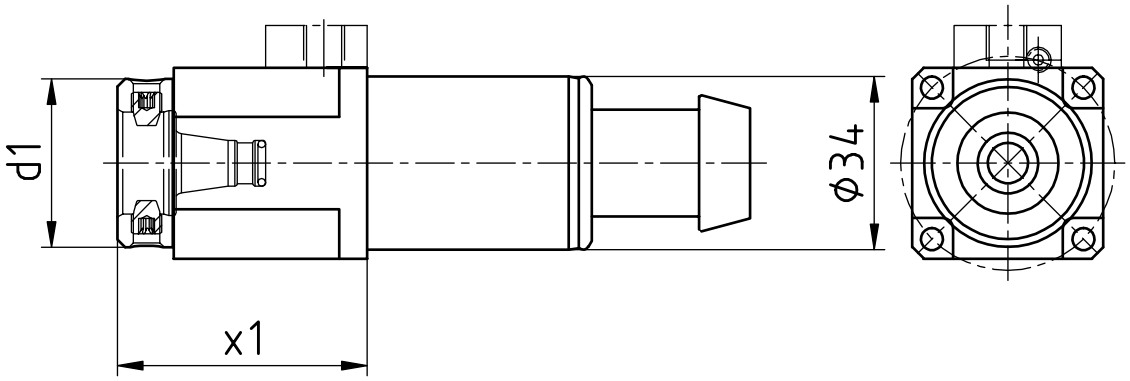


| [mm] | [mm] | Spindle<br>Broche | [Nm] | [rpm] | | Outside cooling<br>Lubrificat. ext. | Internal cooling<br>Lubrificat. cent. | [bar] | Order no.<br>Nº de Code |
|---|---|---|---|---|---|---|---|---|---|
| **d1** | **x1** | **Spindel** | **T max** | **n max** | **i** | **Aussenkühlung** | **Innenkühlung** | **p** | **Bestellnummer** |
| 33 | 50 | WFB 20-12 | 10 | 10.000 | 1:1 | | | | MPU.Z34.B20.AA0.2131K |
| 33 | 50 | WFB 20-12 | 10 | 10.000 | 1:1 | x | x | 80 | MPU.Z34.B20.AE0.2131K |

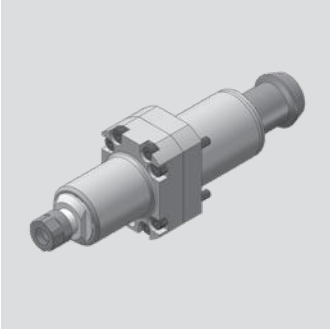

# Maier

**Axial Bohr- und Fräskopf**
Axial drilling and milling head
Outil de perçage et de fraisage axiale

**WG 35**

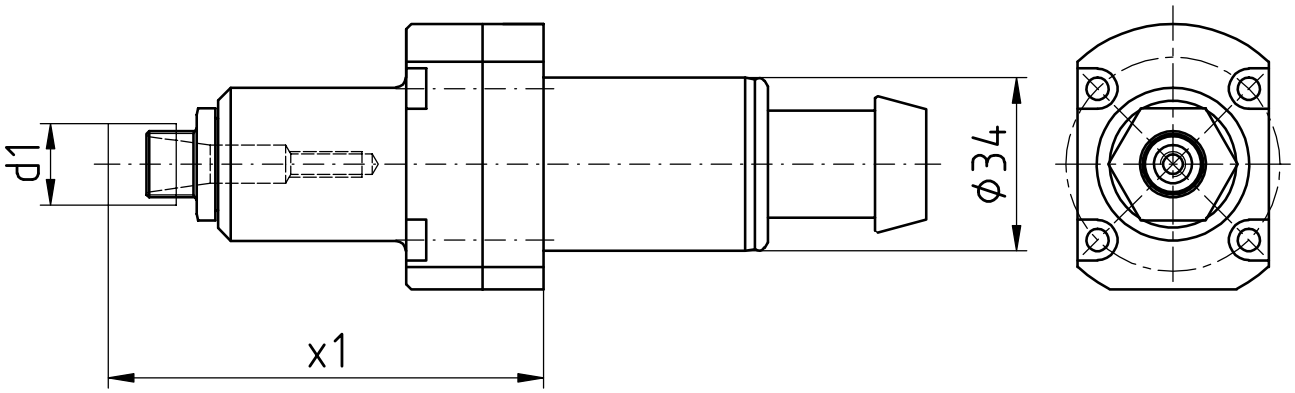


| [mm] | [mm] | Spindle<br>Broche | [Nm] | [rpm] | | Outside cooling<br>Lubrificat. ext. | Internal cooling<br>Lubrificat. cent. | [bar] | Order no.<br>Nº de Code |
|---|---|---|---|---|---|---|---|---|---|
| **d1** | **x1** | **Spindel** | **T max** | **n max** | **i** | **Aussenkühlung** | **Innenkühlung** | **p** | **Bestellnummer** |
| 16 | 85,4 | ER11 MINI | 3 | 24.000 | 1:2,4 | | | | MPU.Z34.E11.BA0.MAIK |

# Maier

**Axial Bohr- und Fräskopf**
Axial drilling and milling head
Outil de perçage et de fraisage axiale

**WG 35**

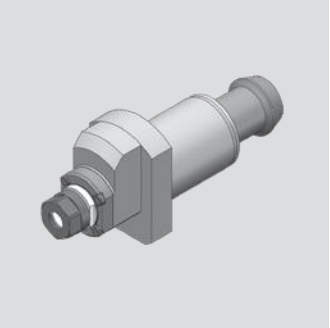

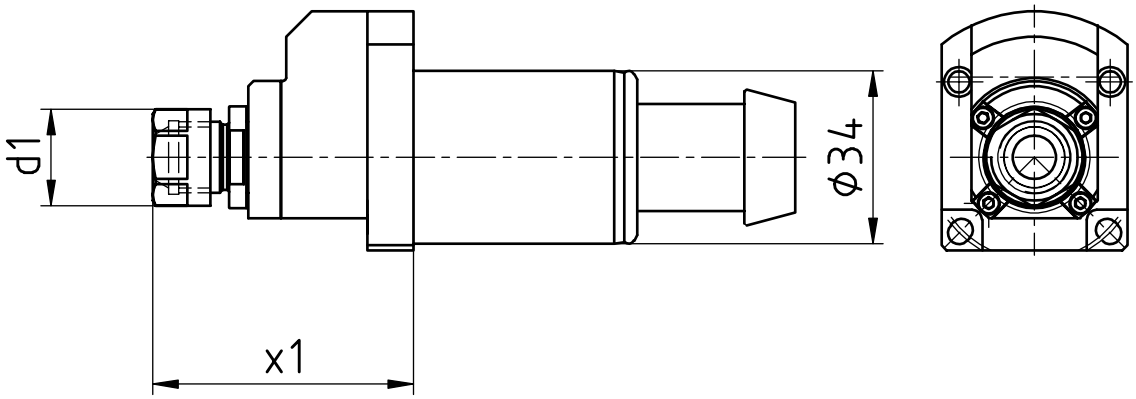


| [mm] | [mm] | Spindle<br>Broche | [Nm] | [rpm] | | Outside cooling<br>Lubrificat. ext. | Internal cooling<br>Lubrificat. cent. | [bar] | Order no.<br>Nº de Code |
|---|---|---|---|---|---|---|---|---|---|
| **d1** | **x1** | **Spindel** | **T max** | **n max** | **i** | **Aussenkühlung** | **Innenkühlung** | **p** | **Bestellnummer** |
| 19 | 51,2 | ER11 | 2 | 32.000 | 1:4 | | | | MPU.Z34.E11.BA0.MAIK4 |

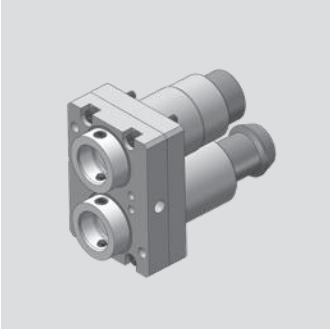

# Maier

**Axial Bohr- und Fräskopf**
Axial drilling and milling head
Outil de perçage et de fraisage axiale

**WG 35**

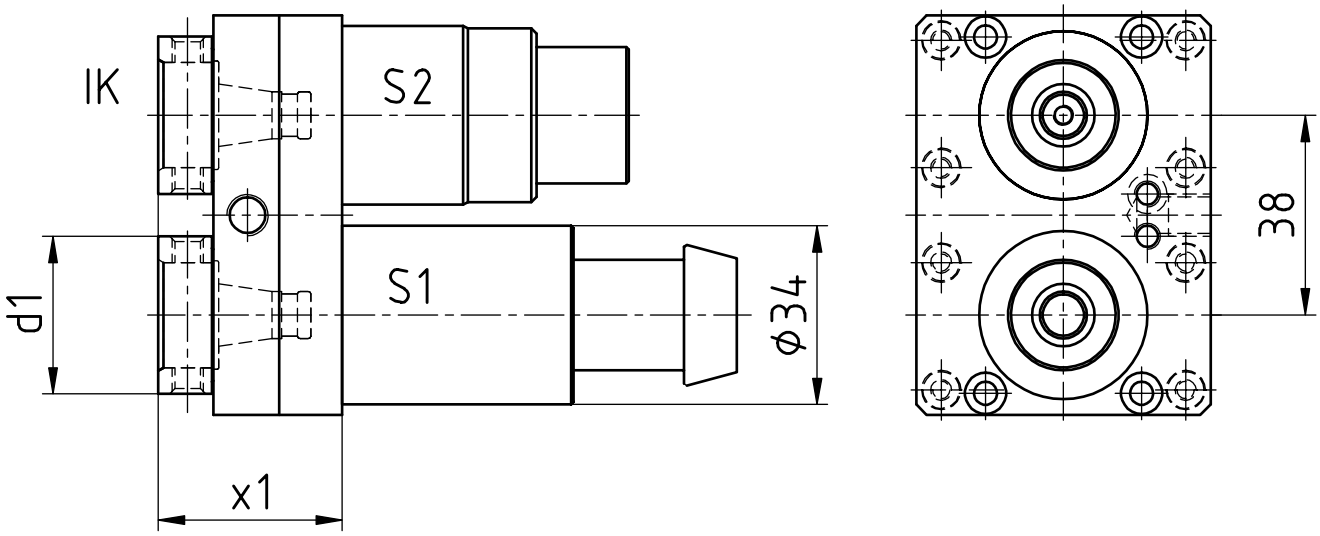


| [mm] | [mm] | Spindle<br>Broche | [Nm] | [rpm] | | Outside cooling<br>Lubrificat. ext. | Internal cooling<br>Lubrificat. cent. | [bar] | Order no.<br>Nº de Code |
|---|---|---|---|---|---|---|---|---|---|
| **d1** | **x1** | **Spindel** | **T max** | **n max** | **i** | **Aussenkühlung** | **Innenkühlung** | **p** | **Bestellnummer** |
| 30 | 35 | WFB 20-12 | 10* | 10.000* | 1:1* | x | x | 80 | MPU.Z34.B20.ME0.MAIK |

* S1: 10 Nm/10.000 rpm/i=1:1
S2: 7 Nm/15.000 rpm/i=1:1,5

# Maier

**Bohr- und Fräskopf winkelverstellbar**
Drilling and milling swivel head
Outil de perçage et de fraisage tournant

**WG 35**

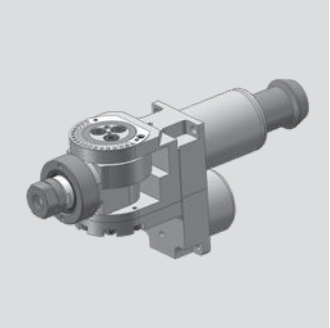

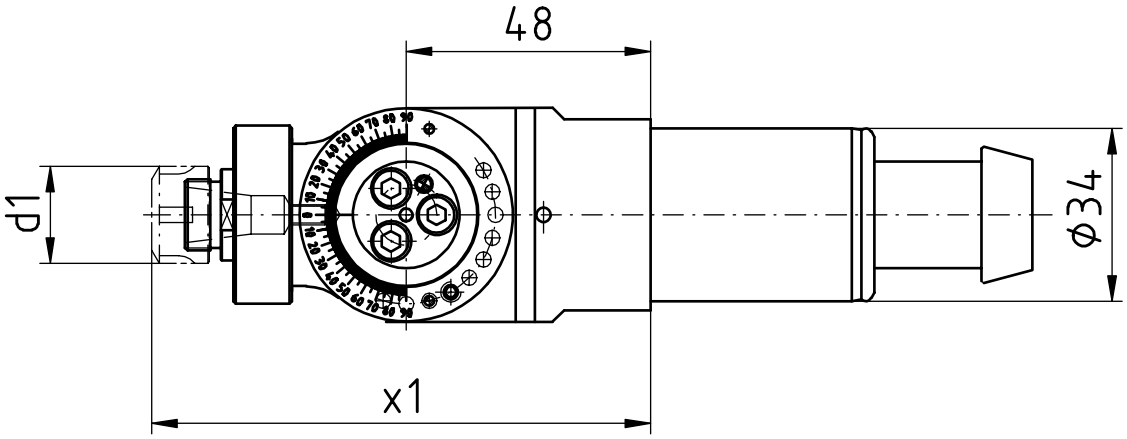


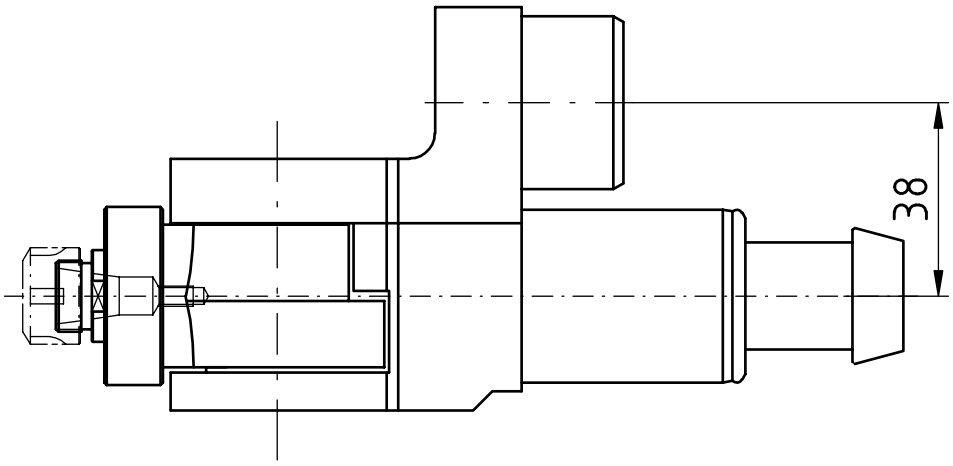


| [mm] | [mm] | Spindle<br>Broche | [Nm] | [rpm] | | Outside cooling<br>Lubrificat. ext. | Internal cooling<br>Lubrificat. cent. | [bar] | Order no.<br>Nº de Code |
|---|---|---|---|---|---|---|---|---|---|
| **d1** | **x1** | **Spindel** | **T max** | **n max** | **i** | **Aussenkühlung** | **Innenkühlung** | **p** | **Bestellnummer** |
| 19 | 98 | ER11 | 5 | 10.000 | 1:1 | | | | MPU.Z34.E11.SA0.MAIK |

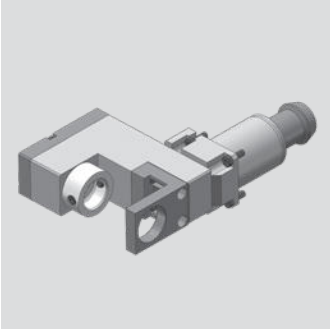

# Maier

**Radial Bohr- und Fräskopf**
Radial drilling and milling head
Outil de perçage et de fraisage radiale

**WG 35**

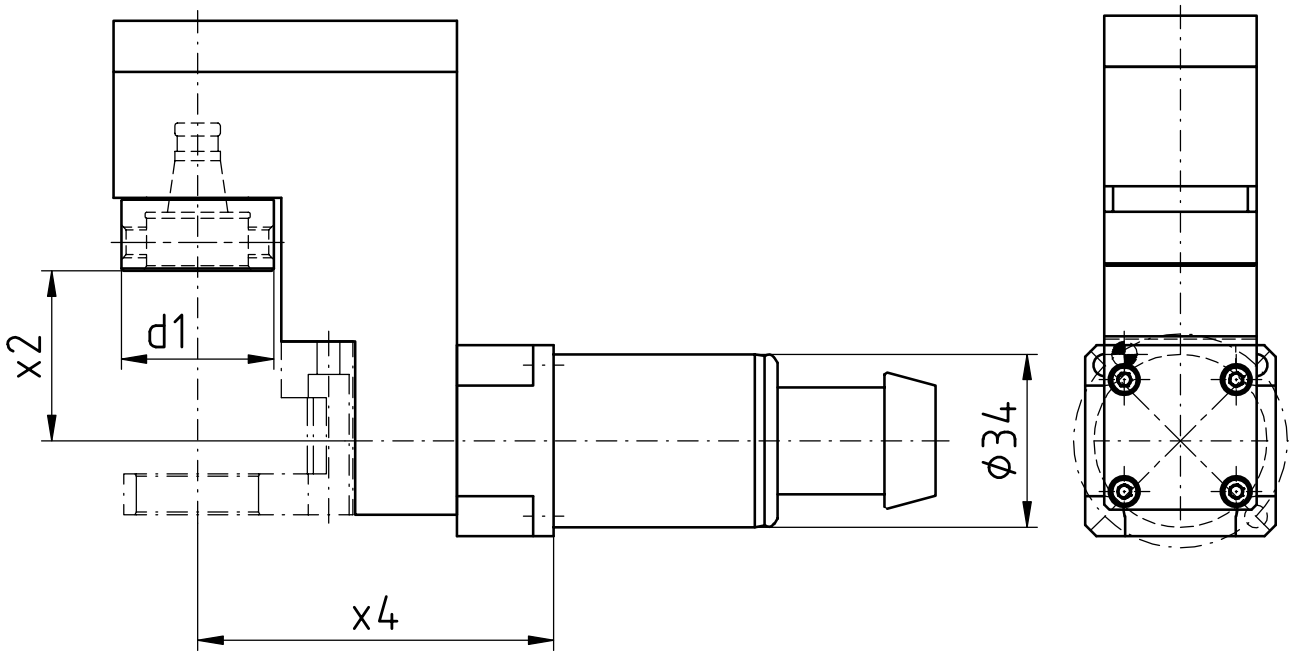


| [mm] | [mm] | [mm] | Spindle<br>Broche | [Nm] | [rpm] | | Outside cooling<br>Lubrificat. ext. | Internal cooling<br>Lubrificat. cent. | [bar] | Order no.<br>Nº de Code |
|---|---|---|---|---|---|---|---|---|---|---|
| **d1** | **x2** | **x4** | **Spindel** | **T max** | **n max** | **i** | **Aussenkühlung** | **Innenkühlung** | **p** | **Bestellnummer** |
| 30 | 33,4 | 70 | WFB 20-12 | 6 | 10.000 | 1:1 | | | | MPU.Z34.B20.VA0.MAIK |

# Modulare Aggregatetechnik

## Star

**Katalog ST-02**

# WFB-Adapterpool

Indications for the customer

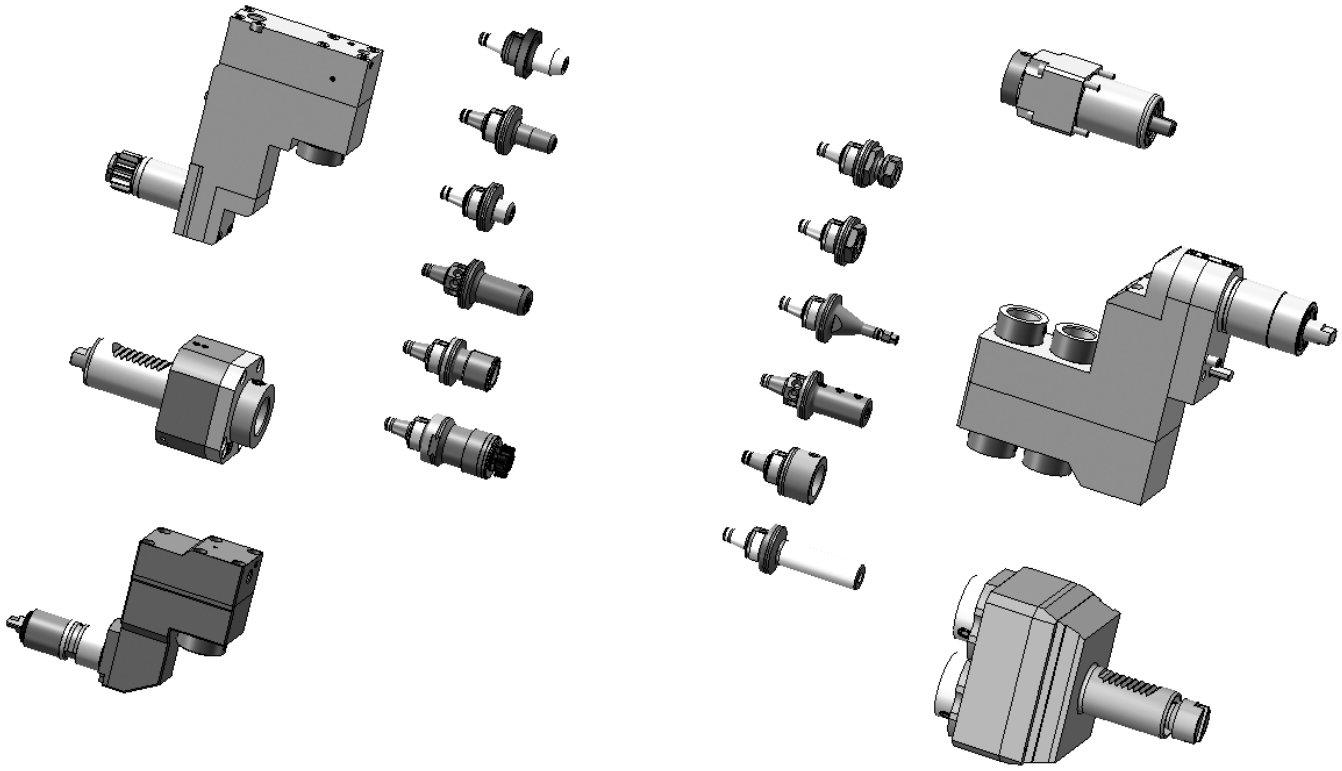

**Mit den Werkzeughaltern von W&F in statischer oder angetriebener Ausführung und dem WFB-Adaptersystem haben Sie die einzigartige Möglichkeit, für sämtliche Hersteller egal ob im Kurzdrehen, Langdrehen oder Mehrspindeldrehen ein durchgängiges modulares Werkzeugsystem einzusetzen.**

The W&F tool holders are in static or driven performance and beyond that, the WFB-adapter system offers you an unique option to use it for every machine manufacturer whether you are manufacturer producing with swiss type lathes, standard turning machines or multispindle turning machines, WFB is suitable.

# Star

**Axial Bohr- und Fräskopf**
Axial drilling and milling head
Outil de perçage et de fraisage axiale

**WG 35**

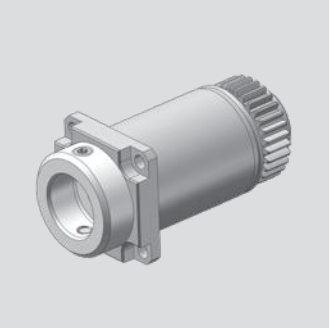

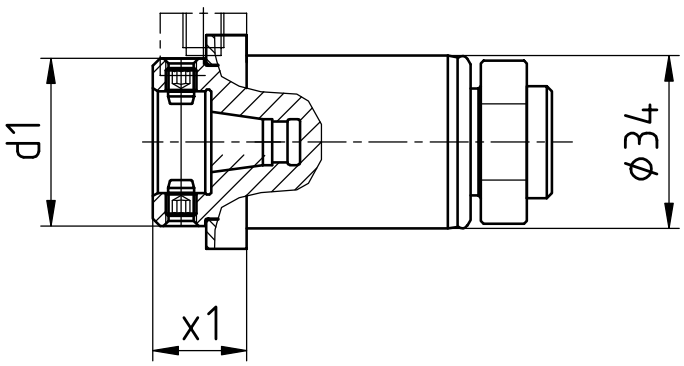


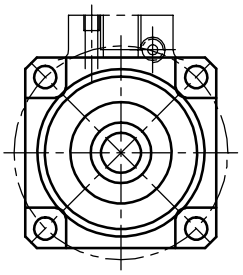

| [mm] | [mm] | Spindle<br>Broche | [Nm] | [rpm] | | Outside cooling<br>Lubrificat. ext. | Internal cooling<br>Lubrificat. cent. | [bar] | Order no.<br>Nº de Code |
|---|---|---|---|---|---|---|---|---|---|
| **d1** | **x1** | **Spindel** | **T max** | **n max** | **i** | **Aussenkühlung** | **Innenkühlung** | **p** | **Bestellnummer** |
| 33 | 18,5 | WFB 20-12 | 10 | 8.000 | 1:1 | | | | MPU.Z34.B20.AA0.SR20 |
| 33 | 18,5 | WFB 20-12 | 10 | 8.000 | 1:1 | x | x | 80 | MPU.Z34.B20.AE0.SR20 |

| | | | |
|---|---|---|---|
| **Passend für Maschine:**<br>suitable machines:<br>approprié pour la machine: | ECAS-12/20 | SR-20J/ JN | SR-20RIV |
| | ECAS-32T | SR-20RIII | SV-38R |
| | SB-12/20R | SR-20RII | SW-20 |

| | |
|---|---|
| **Ähnlich OEM Nr.**<br>similar to OEM no.<br>semblable au OEM nombre | 331-50-00 |

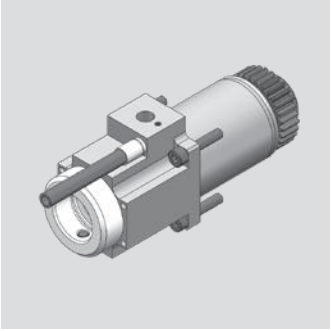

# Star

**Axial Bohr- und Fräskopf**
Axial drilling and milling head
Outil de perçage et de fraisage axiale

**WG 35**

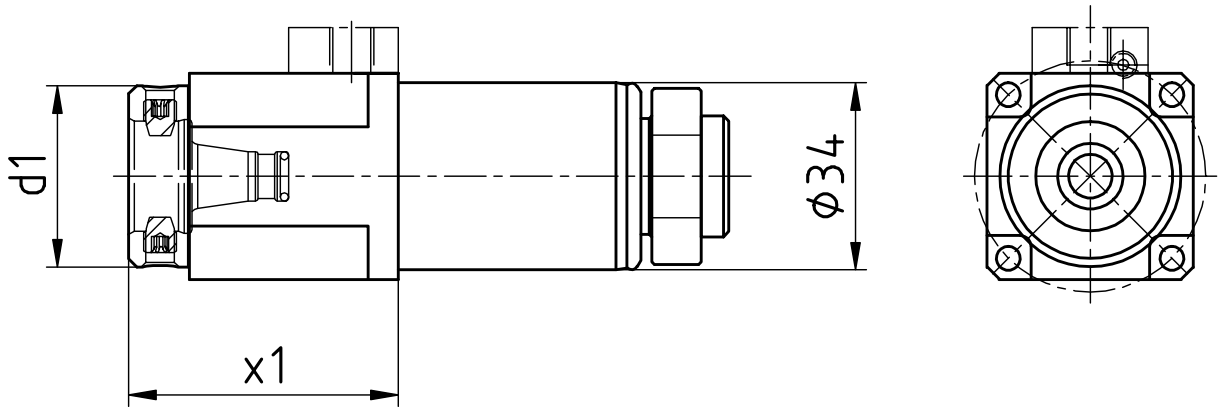


| [mm] | [mm] | Spindle<br>Broche | [Nm] | [rpm] | | Outside cooling<br>Lubrificat. ext. | Internal cooling<br>Lubrificat. cent. | [bar] | Order no.<br>Nº de Code |
|---|---|---|---|---|---|---|---|---|---|
| **d1** | **x1** | **Spindel** | **T max** | **n max** | **i** | **Aussenkühlung** | **Innenkühlung** | **p** | **Bestellnummer** |
| 33 | 50 | WFB 20-12 | 10 | 8.000 | 1:1 | | | | MPU.Z34.B20.AA0.SR20V |
| 33 | 50 | WFB 20-12 | 10 | 8.000 | 1:1 | x | x | 80 | MPU.Z34.B20.AE0.SR20V |

| | | | |
|---|---|---|---|
| **Passend für Maschine:**<br>suitable machines:<br>approprié pour la machine: | ECAS-12/20 | SR-20J/ JN | SR-20RIV |
| | ECAS-32T | SR-20RIII | SV-38R |
| | SB-12/20R | SR-20RII | SW-20 |

| | |
|---|---|
| **Ähnlich OEM Nr.**<br>similar to OEM no.<br>semblable au OEM nombre | 331-50-00 |

# Star

**Axial Bohr- und Fräskopf**
Axial drilling and milling head
Outil de perçage et de fraisage axiale

**WG 35**

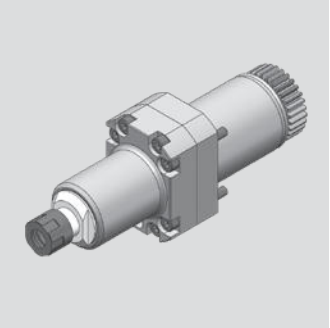

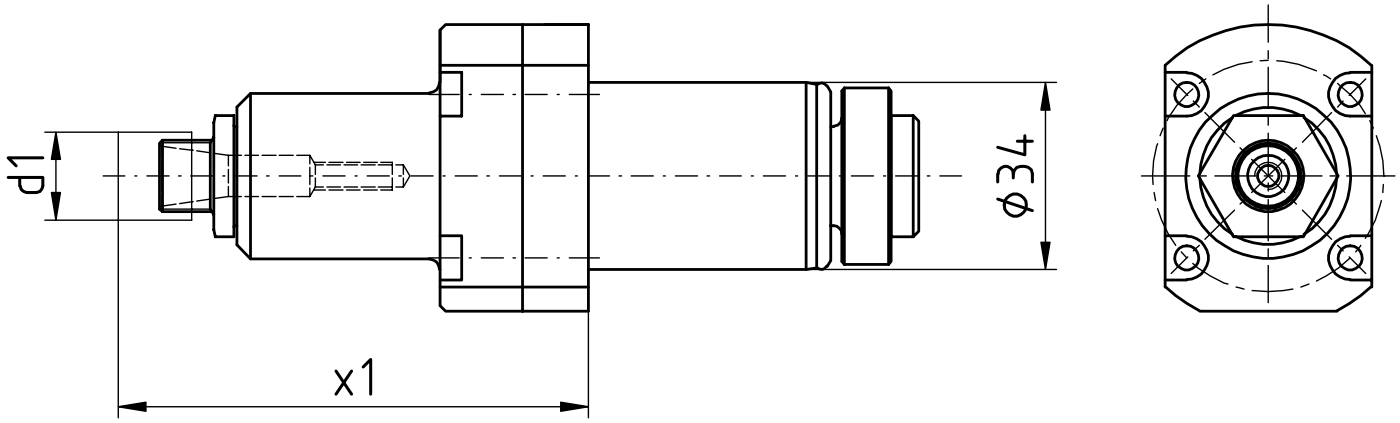


| [mm] | [mm] | Spindle<br>Broche | [Nm] | [rpm] | | Outside cooling<br>Lubrificat. ext. | Internal cooling<br>Lubrificat. cent. | [bar] | Order no.<br>Nº de Code |
|---|---|---|---|---|---|---|---|---|---|
| **d1** | **x1** | **Spindel** | **T max** | **n max** | **i** | **Aussenkühlung** | **Innenkühlung** | **p** | **Bestellnummer** |
| 16 | 85,4 | ER11 MINI | 3 | 19.200 | 1:2,4 | | | | MPU.Z34.E11.BA0.SR20 |

| **Passend für Maschine:**<br>suitable machines:<br>approprié pour la machine: | ECAS-12/20<br>SB-12/20R<br>SR-10J | SR-20J/ JN<br>SR-20RIII<br>SR-20RII | SR-20RIV<br>SR-32J/ JN<br>SW-12RII |
|---|---|---|---|

| **Ähnlich OEM Nr.**<br>similar to OEM no.<br>semblable au OEM nombre | 331-50-00 |
|---|---|

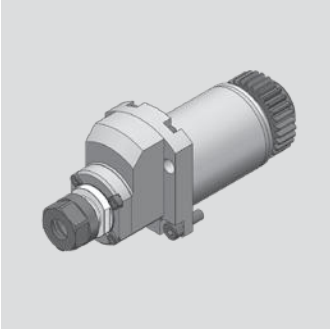

# Star

**Axial Bohr- und Fräskopf**
Axial drilling and milling head
Outil de perçage et de fraisage axiale

**WG 35**

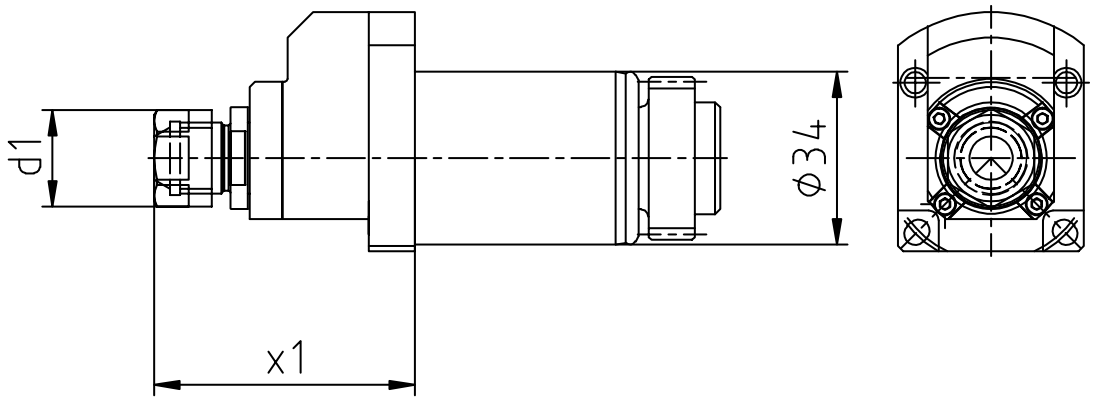


| [mm] | [mm] | Spindle<br>Broche | [Nm] | [rpm] | | Outside cooling<br>Lubrificat. ext. | Internal cooling<br>Lubrificat. cent. | [bar] | Order no.<br>Nº de Code |
|---|---|---|---|---|---|---|---|---|---|
| **d1** | **x1** | **Spindel** | **T max** | **n max** | **i** | **Aussenkühlung** | **Innenkühlung** | **p** | **Bestellnummer** |
| 19 | 51,2 | ER11 | 2 | 32.000 | 1:4 | | | | MPU.Z34.E11.BA0.SR20.I4 |

| **Passend für Maschine:**<br>suitable machines:<br>approprié pour la machine: | ECAS-12/20 | SR-20J/ JN | SR-20RIV |
|---|---|---|---|
| | ECAS-32T | SR-20RIII | SV-38R |
| | SB-12/20R | SR-20RII | SW-20 |

| **Ähnlich OEM Nr.**<br>similar to OEM no.<br>semblable au OEM nombre | 331-50-00 |
|---|---|

# Star

**Radial Bohr- und Fräskopf**
Radial drilling and milling head
Outil de perçage et de fraisage radiale

**WG 35**

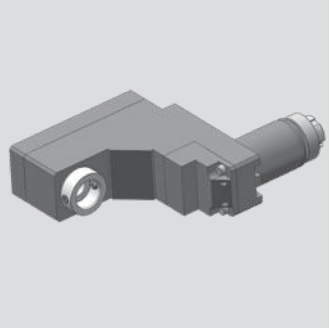

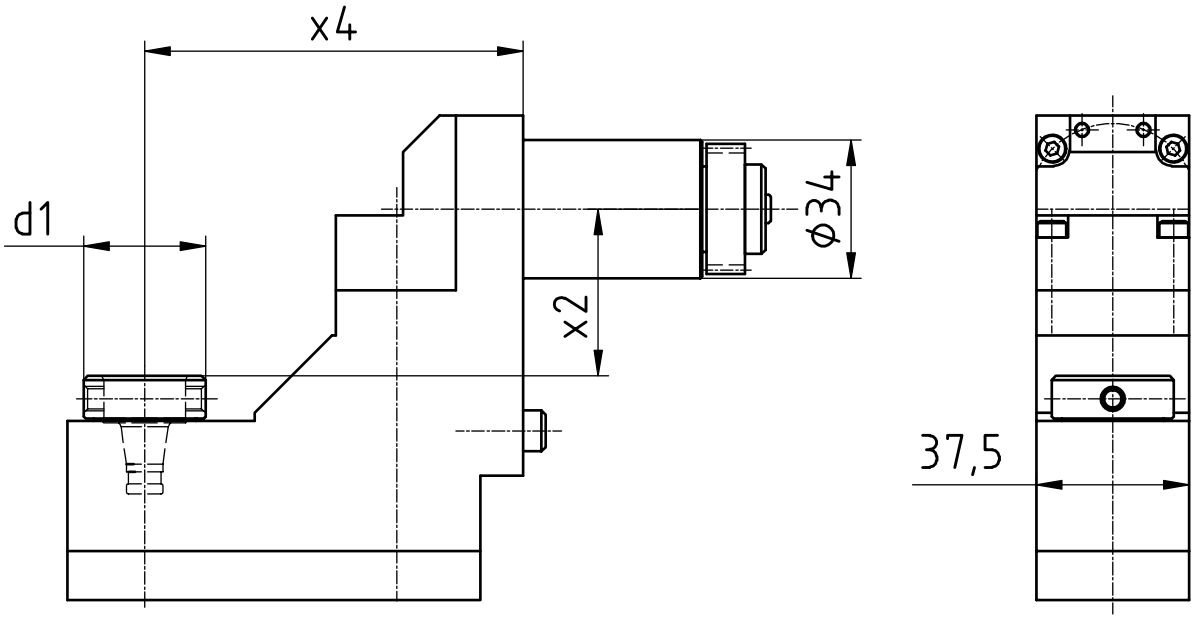


| [mm] | [mm] | [mm] | Spindle<br>Broche | [Nm] | [rpm] | | Outside cooling<br>Lubrificat. ext. | Internal cooling<br>Lubrificat. cent. | [bar] | Order no.<br>Nº de Code |
|---|---|---|---|---|---|---|---|---|---|---|
| **d1** | **x2** | **x4** | **Spindel** | **T max** | **n max** | **i** | **Aussenkühlung** | **Innenkühlung** | **p** | **Bestellnummer** |
| 30 | 41 | 93 | WFB 20-12 | 8 | 8.000 | 1:1 | | | | MPU.Z34.B20.581-52-00 |

| **Passend für Maschine:**<br>suitable machines:<br>approprié pour la machine: | ECAS-12/20<br>SB-12/20R<br>SR-10J | SR-20J/ JN<br>SR-20RIII<br>SR-20RII | SR-20RIV<br>SR-32J/ JN<br>SW-12RII |
|---|---|---|---|

| **Ähnlich OEM Nr.**<br>similar to OEM no.<br>semblable au OEM nombre | 581-52-00 |
|---|---|

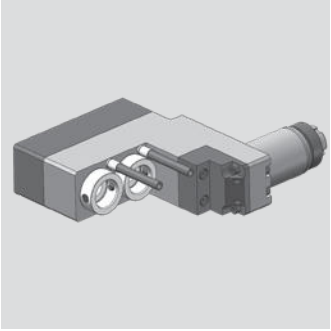

# Star

**Radial Bohr- und Fräskopf**
Radial drilling and milling head
Outil de perçage et de fraisage radiale

**WG 35**

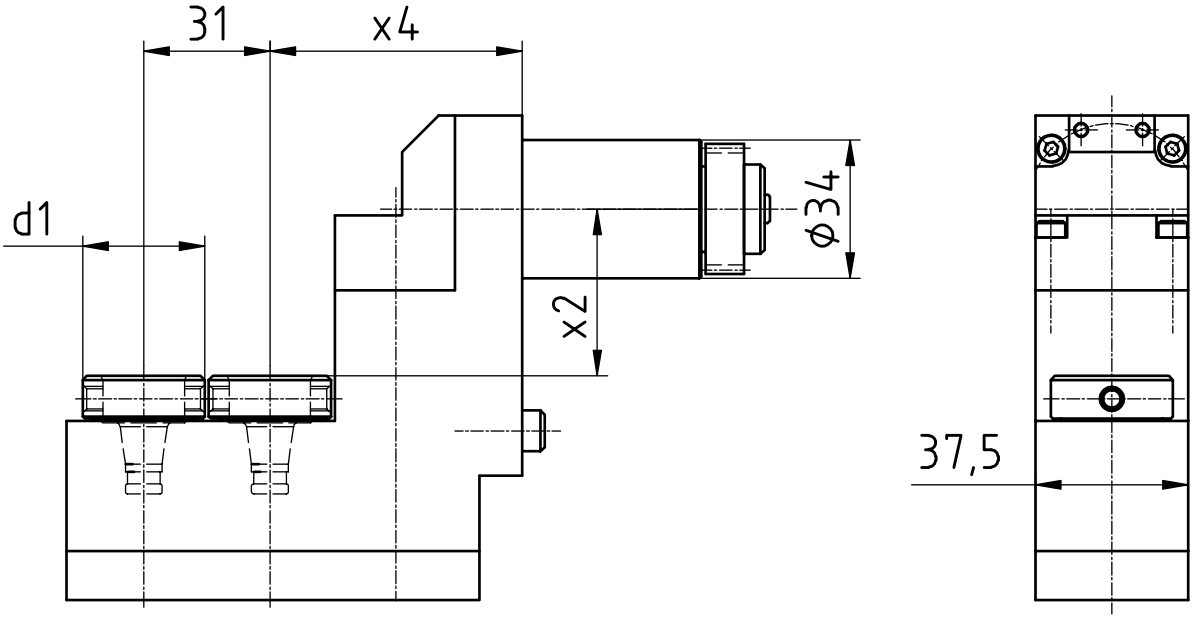


| [mm] | [mm] | [mm] | Spindle<br>Broche | [Nm] | [rpm] | | Outside cooling<br>Lubrificat. ext. | Internal cooling<br>Lubrificat. cent. | [bar] | Order no.<br>Nº de Code |
|---|---|---|---|---|---|---|---|---|---|---|
| **d1** | **x2** | **x4** | **Spindel** | **T max** | **n max** | **i** | **Aussenkühlung** | **Innenkühlung** | **p** | **Bestellnummer** |
| 30 | 41 | 62 | WFB 20-12 | 8 | 8.000 | 1:1 | | | | MPU.Z34.B20.541-51-00 |
| 30 | 41 | 62 | WFB 20-12 | 8 | 8.000 | 1:1 | x | x | 80 | MPU.Z34.B20.541-51-IK |

| | | |
|---|---|---|
| **Passend für Maschine:**<br>suitable machines:<br>approprié pour la machine: | SB-12/20R<br>SR-20J/ JN<br>SR-20RIII | SR-20RII<br>SR-20RIV |

| | |
|---|---|
| **Ähnlich OEM Nr.**<br>similar to OEM no.<br>semblable au OEM nombre | 541-51-00 |

# Star

**Radial Bohr- und Fräskopf**
Radial drilling and milling head
Outil de perçage et de fraisage radiale

**WG 35**

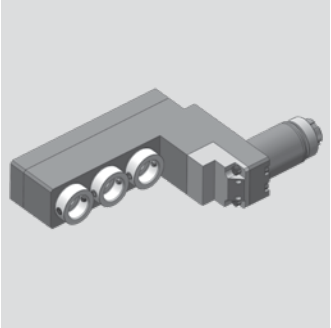

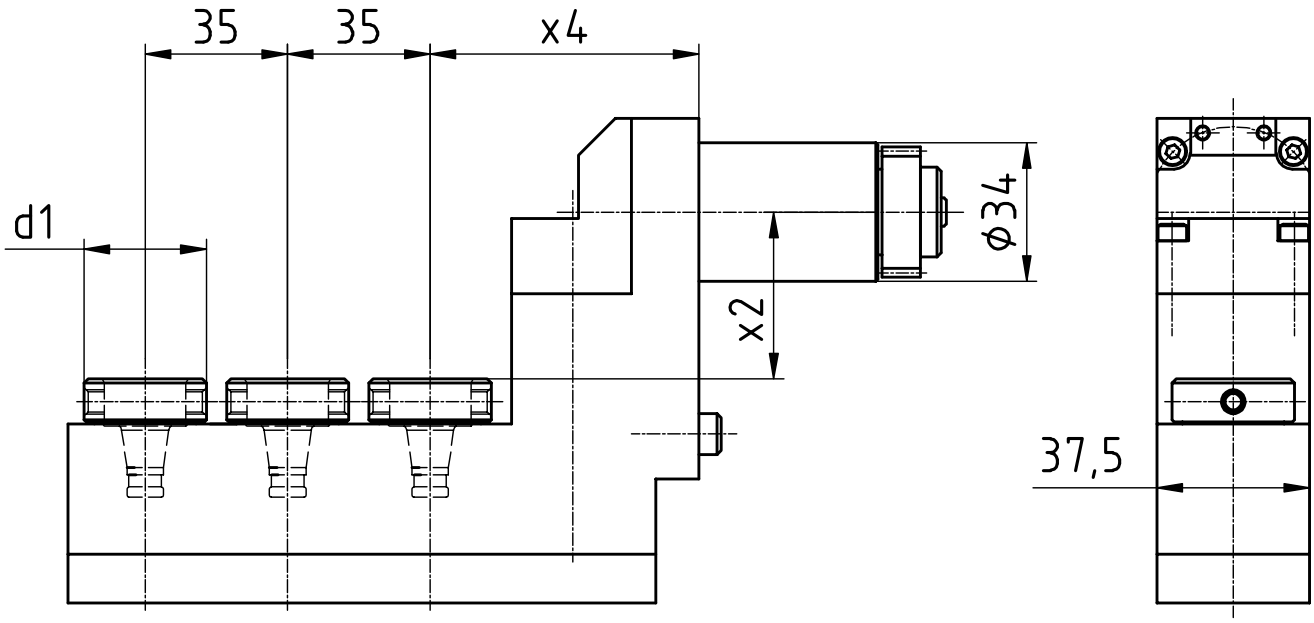


| [mm] | [mm] | [mm] | Spindle<br>Broche | [Nm] | [rpm] | | Outside cooling<br>Lubrificat. ext. | Internal cooling<br>Lubrificat. cent. | [bar] | Order no.<br>Nº de Code |
|---|---|---|---|---|---|---|---|---|---|---|
| **d1** | **x2** | **x4** | **Spindel** | **T max** | **n max** | **i** | **Aussenkühlung** | **Innenkühlung** | **p** | **Bestellnummer** |
| 30 | 41 | 66 | WFB 20-12 | 8 | 8.000 | 1:1 | | | | MPU.Z34.B20.661-51-00 |

| | | |
|---|---|---|
| **Passend für Maschine:**<br>suitable machines:<br>approprié pour la machine: | SB-12/20R<br>SR-20J/ JN<br>SR-20RIII | SR-20RII<br>SR-20RIV |

| | |
|---|---|
| **Ähnlich OEM Nr.**<br>similar to OEM no.<br>semblable au OEM nombre | 661-51-00 |

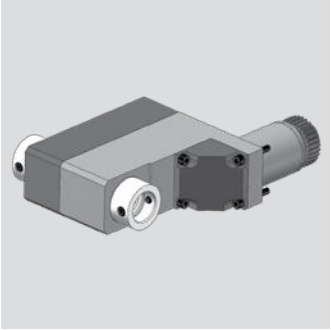

# Star

**Radial-Bohr- und Fräskopf (Mehrkantschlagen)**
radial drilling and milling head (polyhedral beat)
Outil Rotatif Radial de Pertage et de Fraisage (battement polyedrique)

**WG 35**

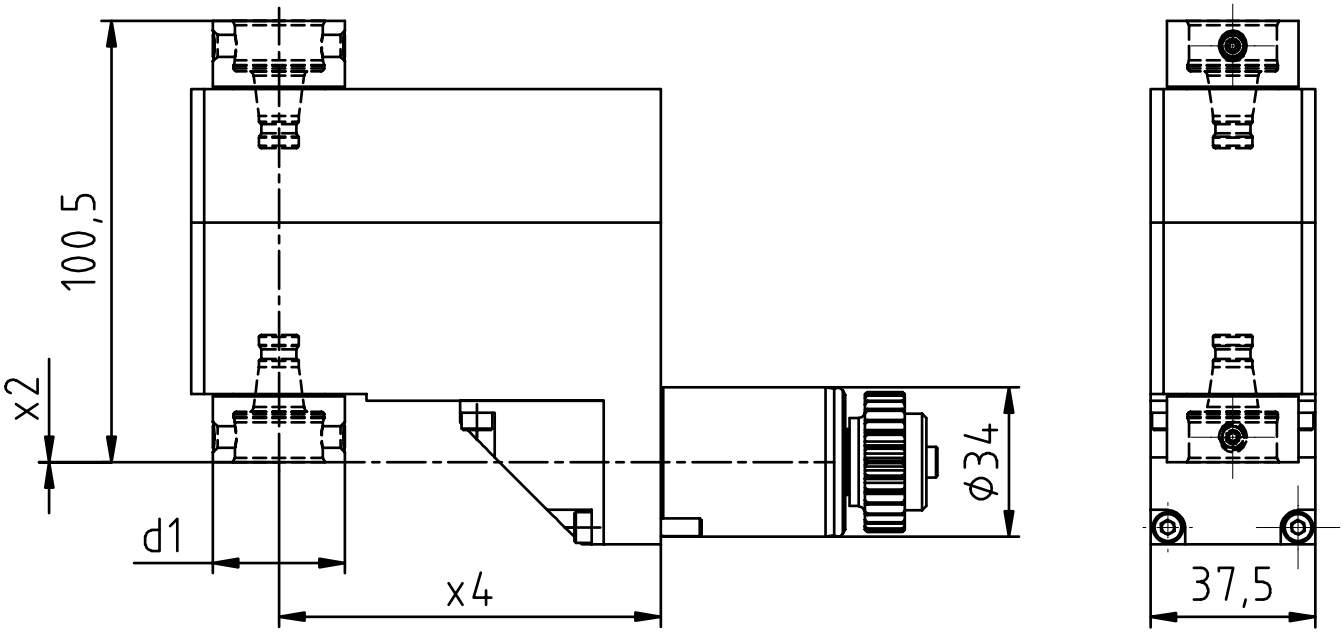


| [mm] | [mm] | [mm] | Spindle<br>Broche | [Nm] | [rpm] | | Outside cooling<br>Lubrificat. ext. | Internal cooling<br>Lubrificat. cent. | [bar] | Order no.<br>Nº de Code |
|---|---|---|---|---|---|---|---|---|---|---|
| **d1** | **x2** | **x4** | **Spindel** | **T max** | **n max** | **i** | **Aussenkühlung** | **Innenkühlung** | **p** | **Bestellnummer** |
| 30 | 0 | 87 | WFB 20-12 | 13 | 8.000 | 1:1 | | | | MPU.Z34.0900.SR20 |

| **Passend für Maschine:**<br>suitable machines:<br>approprié pour la machine: | ECAS-12/20<br>SB-12/20R<br>SR-10J | SR-20J/ JN<br>SR-20RIII<br>SR-20RII | SR-20RIV<br>SR-32J/ JN<br>SW-12RII |
|---|---|---|---|

| **Ähnlich OEM Nr.**<br>similar to OEM no.<br>semblable au OEM nombre | 221-56-00 |
|---|---|

# Star

**Radial Bohr- und Fräskopf**
Radial drilling and milling head
Outil de perçage et de fraisage radiale

**WG 35**

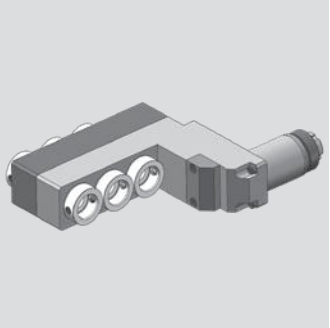

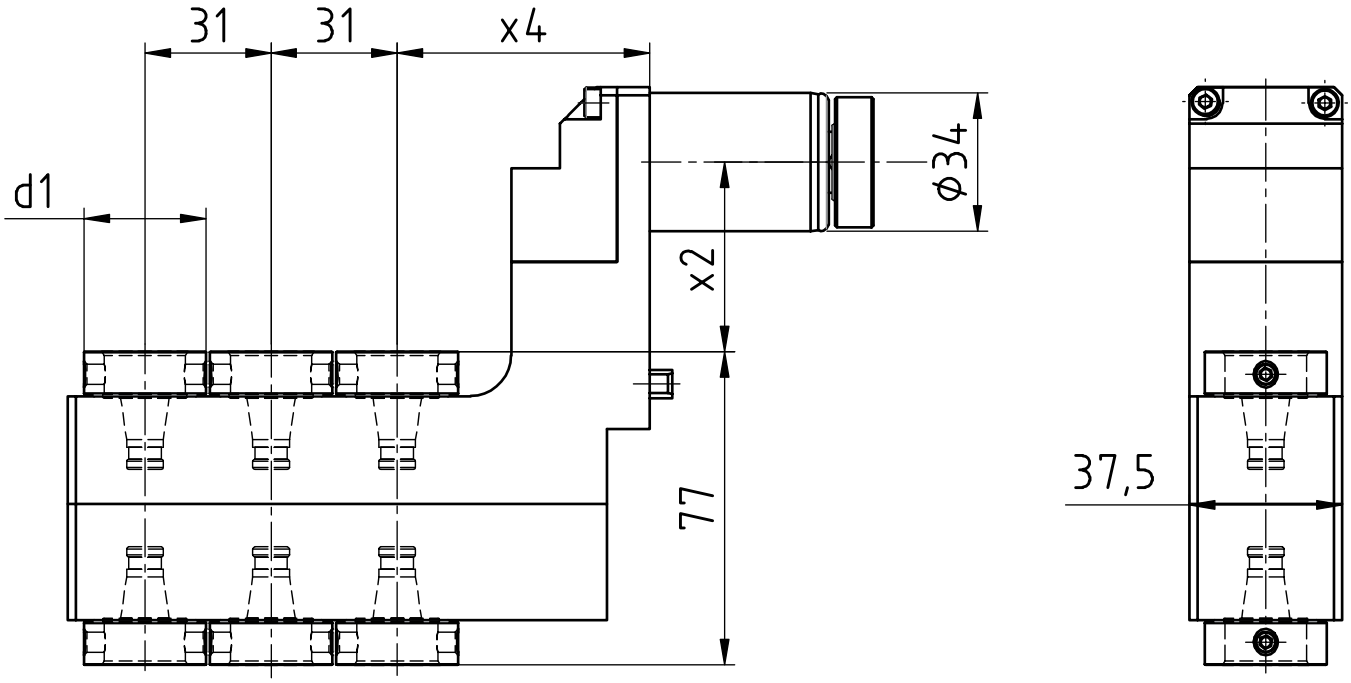


| [mm] | [mm] | [mm] | Spindle<br>Broche | [Nm] | [rpm] | | Outside cooling<br>Lubrificat. ext. | Internal cooling<br>Lubrificat. cent. | [bar] | Order no.<br>Nº de Code |
|---|---|---|---|---|---|---|---|---|---|---|
| **d1** | **x2** | **x4** | **Spindel** | **T max** | **n max** | **i** | **Aussenkühlung** | **Innenkühlung** | **p** | **Bestellnummer** |
| 30 | 46,5 | 62 | WFB 20-12 | 8 | 8.000 | 1:1 | | | | MPU.Z34.B20.6A0.0M1-55 |

| | |
|---|---|
| **Passend für Maschine:**<br>suitable machines:<br>approprié pour la machine: | SR-20J/ JN SR-20RIV<br>SR-20RIII<br>SR-20RII |

| | |
|---|---|
| **Ähnlich OEM Nr.**<br>similar to OEM no.<br>semblable au OEM nombre | OM1-55 |

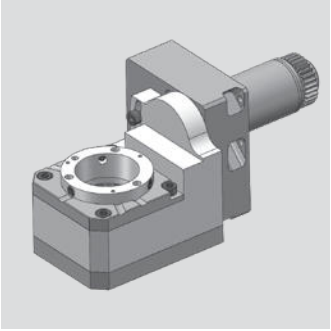

# Star

**Gewindewirbelapparat modular**
Thread whirling unit
Unité de tourbillonnement

**WG 35**

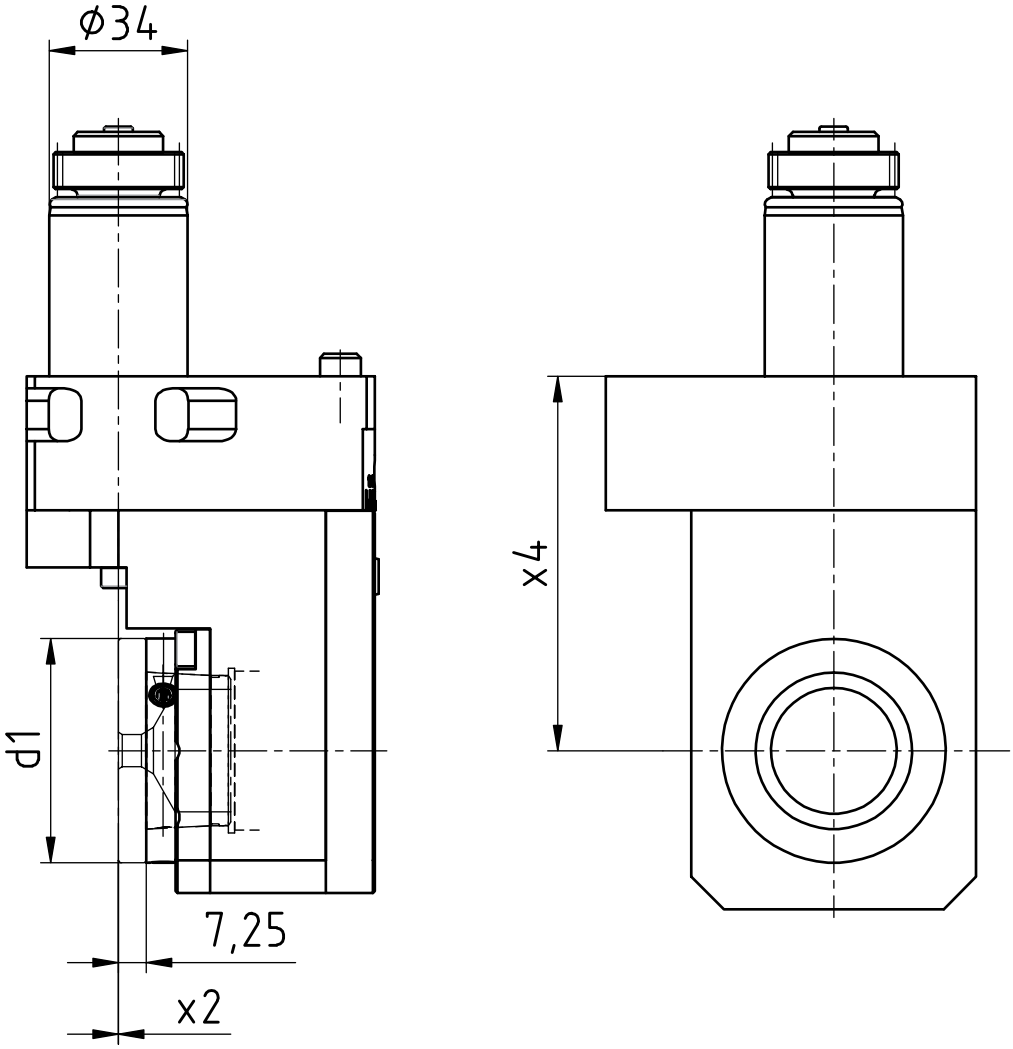


| [mm] | [mm] | [mm] | Spindle<br>Broche | [Nm] | [rpm] | | Outside cooling<br>Lubrificat. ext. | Internal cooling<br>Lubrificat. cent. | [bar] | Order no.<br>Nº de Code |
|---|---|---|---|---|---|---|---|---|---|---|
| **d1** | **x2** | **x4** | **Spindel** | **T max** | **n max** | **i** | **Aussenkühlung** | **Innenkühlung** | **p** | **Bestellnummer** |
| 54 | 0 | 92 | WFW 50 | 16 | 4.000 | 2:1 | x | | | MPU.Z34.M0800.SR20 |

| **Passend für Maschine:**<br>suitable machines:<br>approprié pour la machine: | ECAS-12/20 | SR-20J/JN | R-20RIV |
|---|---|---|---|
| | SB-12/20R | SR-20RIII | R-32J/JN |
| | SR-10J | SR-20RII | SW-12RII |

| **Ähnlich OEM Nr.**<br>similar to OEM no.<br>semblable au OEM nombre | 541-78-00 |
|---|---|

# Star

**Axial Bohr- und Fräskopf**
Axial drilling and milling head
Outil de perçage et de fraisage axiale

**WG 35**

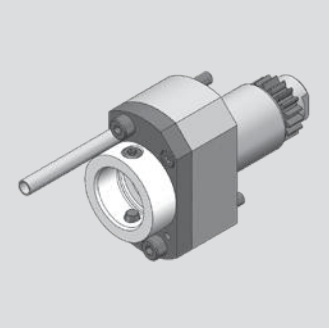

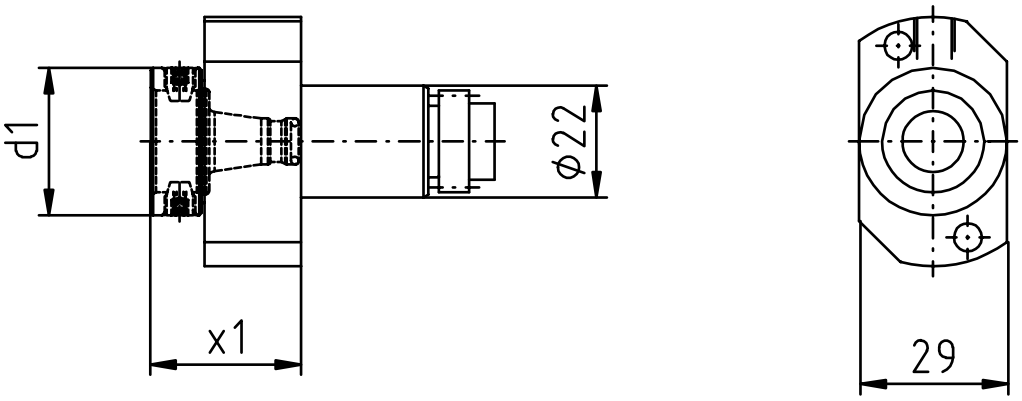


| [mm] | [mm] | Spindle<br>Broche | [Nm] | [rpm] | | Outside cooling<br>Lubrificat. ext. | Internal cooling<br>Lubrificat. cent. | [bar] | Order no.<br>Nº de Code |
|---|---|---|---|---|---|---|---|---|---|
| **d1** | **x1** | **Spindel** | **T max** | **n max** | **i** | **Aussenkühlung** | **Innenkühlung** | **p** | **Bestellnummer** |
| 29 | 29,5 | WFB 20-12 | 10 | 8.000 | 1:1 | | | | MPU.Z22.B20.541-61-00 |
| 29 | 29,5 | WFB 20-12 | 10 | 8.000 | 1:1 | x | x | 80 | MPU.Z22.B20.541-61-IK |

| | | | |
|---|---|---|---|
| **Passend für Maschine:**<br>suitable machines:<br>approprié pour la machine: | ECAS-12/20 | SR-20J/ JN | SR-20RIV |
| | SB-12/20R | SR-20RIII | SR-32J/ JN |
| | SR-10J | SR-20RII | SW-12RII |

| | |
|---|---|
| **Ähnlich OEM Nr.**<br>similar to OEM no.<br>semblable au OEM nombre | 541-61-00 |

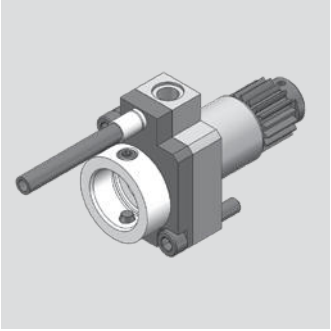

# Star

**Axial Bohr- und Fräskopf**
Axial drilling and milling head
Outil de perçage et de fraisage axiale

**WG 35**

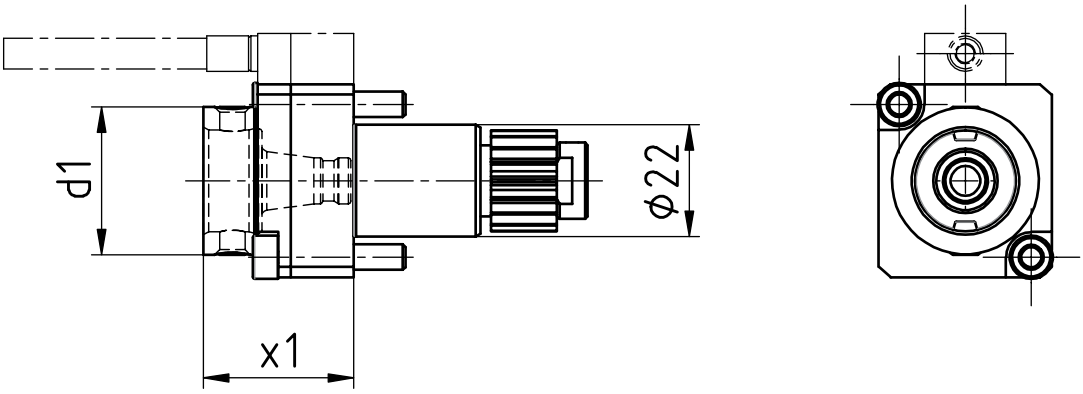


| [mm] | [mm] | Spindle<br>Broche | [Nm] | [rpm] | | Outside cooling<br>Lubrificat. ext. | Internal cooling<br>Lubrificat. cent. | [bar] | Order no.<br>Nº de Code |
|---|---|---|---|---|---|---|---|---|---|
| **d1** | **x1** | **Spindel** | **T max** | **n max** | **i** | **Aussenkühlung** | **Innenkühlung** | **p** | **Bestellnummer** |
| 30 | 29,5 | WFB 20-12 | 10 | 8.000 | 1:1 | | | | MPU.Z22.B20.AA0.OR-61 |
| 30 | 29,5 | WFB 20-12 | 10 | 8.000 | 1:1 | x | x | 80 | MPU.Z22.B20.AE0.OR-61 |

| | | |
|---|---|---|
| **Passend für Maschine:**<br>suitable machines:<br>approprié pour la machine: | SB-12/20R | SR-38(Type A/B) |
| | SR-20RIV | SV-12RII |
| | SR-32J/ JN | SW20 |

| | |
|---|---|
| **Ähnlich OEM Nr.**<br>similar to OEM no.<br>semblable au OEM nombre | OR-61 |

# Star

**Axial Bohr- und Fräskopf**
Axial drilling and milling head
Outil de perçage et de fraisage axiale

**WG 35**

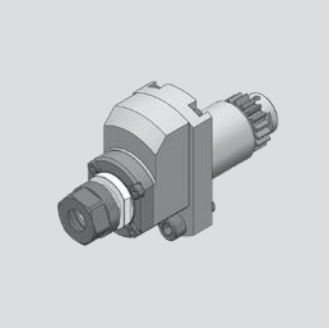

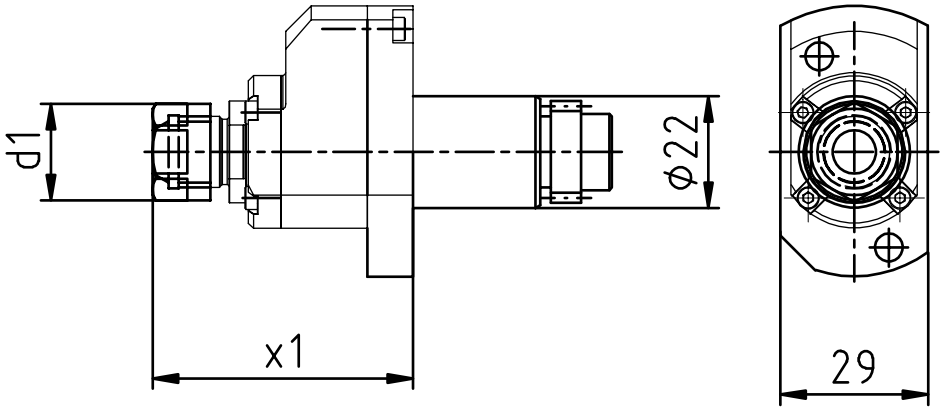


| [mm] | [mm] | Spindle<br>Broche | [Nm] | [rpm] | | Outside cooling<br>Lubrificat. ext. | Internal cooling<br>Lubrificat. cent. | [bar] | Order no.<br>Nº de Code |
|---|---|---|---|---|---|---|---|---|---|
| **d1** | **x1** | **Spindel** | **T max** | **n max** | **i** | **Aussenkühlung** | **Innenkühlung** | **p** | **Bestellnummer** |
| 19 | 51,2 | ER11 | 2 | 32.000 | 1:4 | | | | MPU.Z22.E11.BA0.SR20 |

| **Passend für Maschine:**<br>suitable machines:<br>approprié pour la machine: | ECAS-12/20 | SR-20J/JN | SR-20RIV |
|---|---|---|---|
| | SB-12/20R | SR-20RIII | SR-32J/JN |
| | SR-10J | SR-20RII | SW-12RII |

| **Ähnlich OEM Nr.**<br>similar to OEM no.<br>semblable au OEM nombre | 541-61-00 |
|---|---|

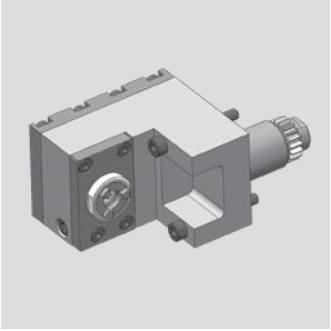

# Star

**Radial Bohr- und Fräskopf**
Radial drilling and milling head
Outil de perçage et de fraisage radiale

**WG 35**

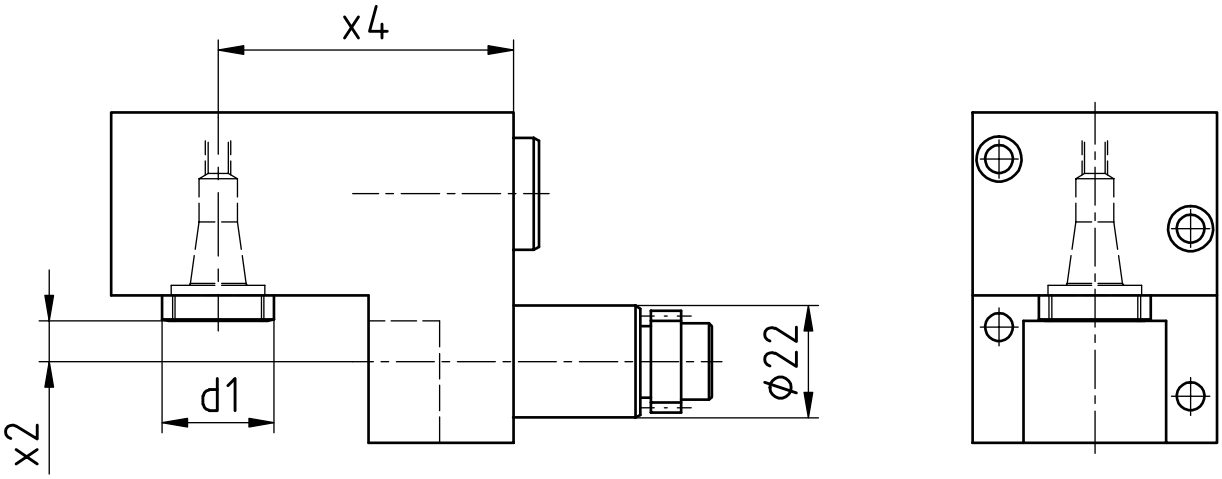


| [mm] | [mm] | [mm] | Spindle<br>Broche | [Nm] | [rpm] | | Outside cooling<br>Lubrificat. ext. | Internal cooling<br>Lubrificat. cent. | [bar] | Order no.<br>Nº de Code |
|---|---|---|---|---|---|---|---|---|---|---|
| **d1** | **x2** | **x4** | **Spindel** | **T max** | **n max** | **i** | **Aussenkühlung** | **Innenkühlung** | **p** | **Bestellnummer** |
| 22 | 8 | 58 | ER11 | 10 | 8.000 | 1:1 | | | | MPU.Z22.E11.VA0.SR20 |

| **Passend für Maschine:**<br>suitable machines:<br>approprié pour la machine: | ECAS-12/20 | SR-20J/JN | SR-20TIV |
|---|---|---|---|
| | SB-12/20R | SR20-RIII | SR-32J/JN |
| | SR-10J | SR20-RII | SW-12RII |

| **Ähnlich OEM Nr.**<br>similar to OEM no.<br>semblable au OEM nombre |
|---|

# Star

**Radial Bohr- und Fräskopf**
Radial drilling and milling head
Outil de perçage et de fraisage radiale

**WG 35**

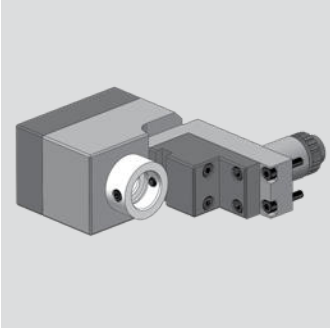

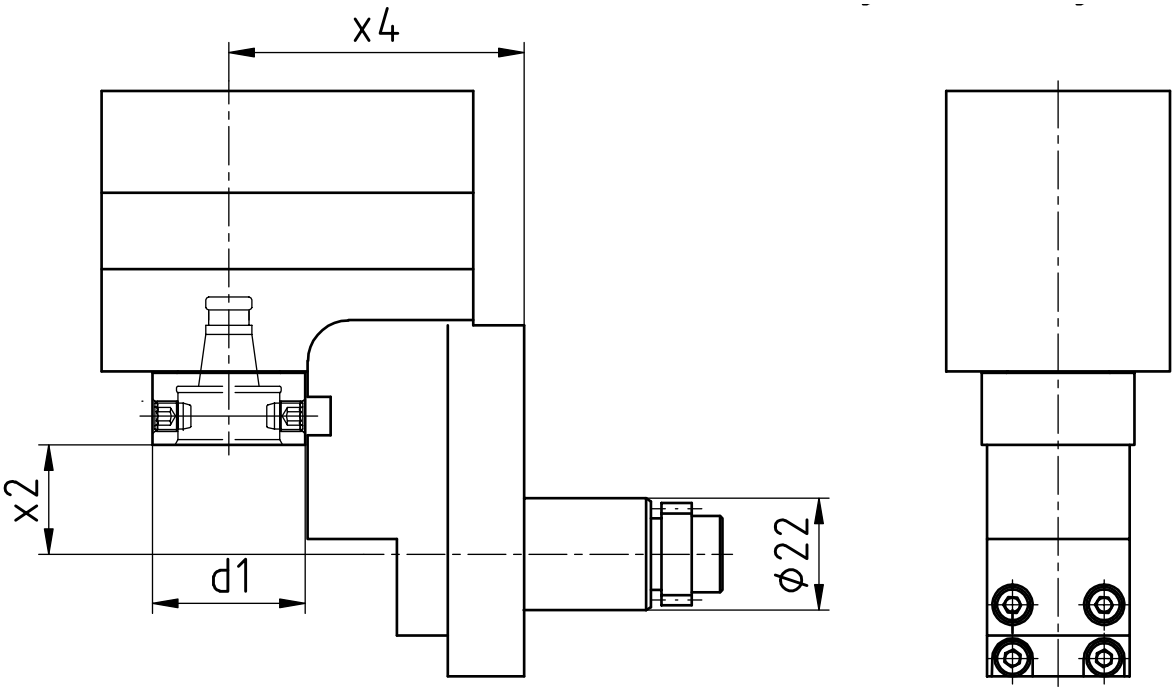


| [mm] | [mm] | [mm] | Spindle<br>Broche | [Nm] | [rpm] | | Outside cooling<br>Lubrificat. ext. | Internal cooling<br>Lubrificat. cent. | [bar] | Order no.<br>Nº de Code |
|---|---|---|---|---|---|---|---|---|---|---|
| **d1** | **x2** | **x4** | **Spindel** | **T max** | **n max** | **i** | **Aussenkühlung** | **Innenkühlung** | **p** | **Bestellnummer** |
| 30 | 21,5 | 84,5 | WFB 20-12 | 13 | 4.000 | 2:1 | | | | MPU.Z22.B20.WA0.SR20 |

| **Passend für Maschine:**<br>suitable machines:<br>approprié pour la machine: | ECAS-12/20 | SR-20J/JN | SR-20TIV |
|---|---|---|---|
| | SB-12/20R | SR20-RIII | SR-32J/JN |
| | SR-10J | SR20-RII | SW-12RII |

**Ähnlich OEM Nr.**
similar to OEM no.
semblable au OEM nombre

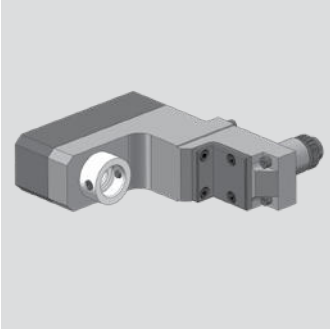

# Star

**Radial Bohr- und Fräskopf**
Radial drilling and milling head
Outil de perçage et de fraisage radiale

**WG 35**

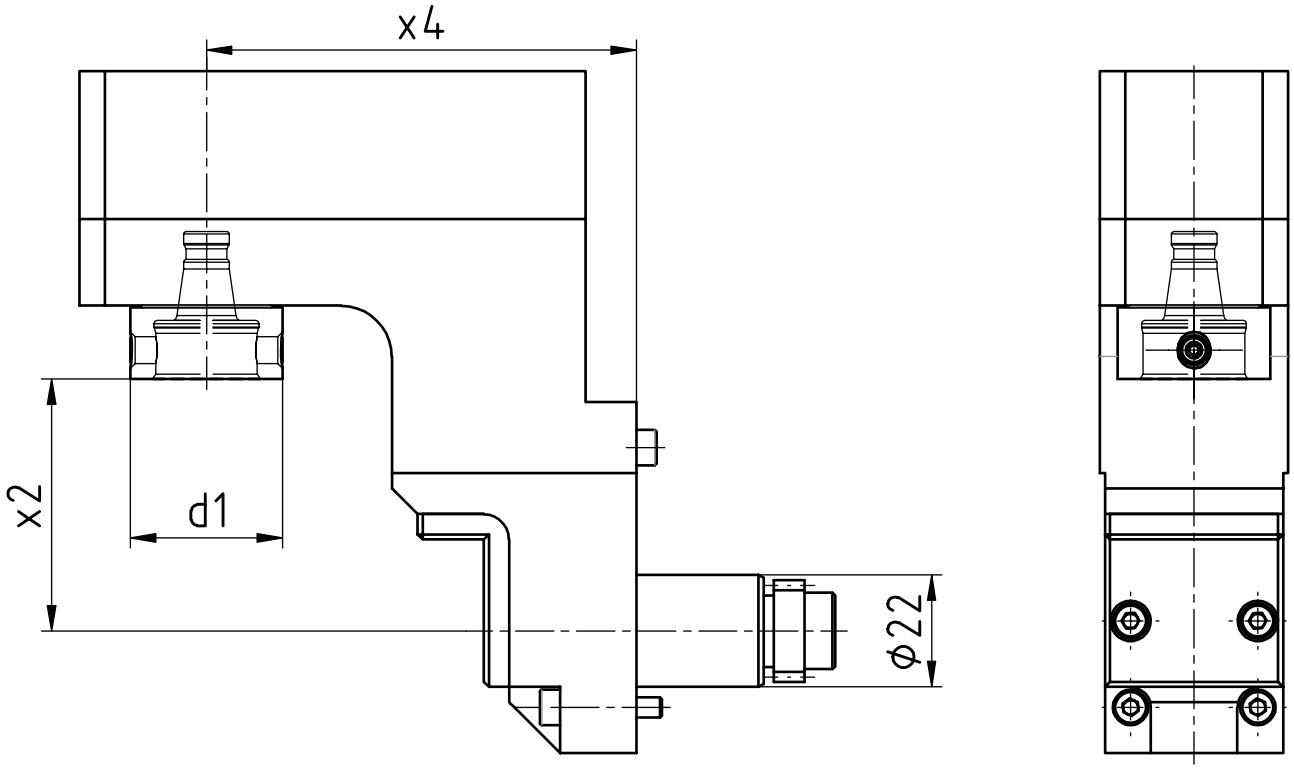


| [mm] | [mm] | [mm] | Spindle<br>Broche | [Nm] | [rpm] | | Outside cooling<br>Lubrificat. ext. | Internal cooling<br>Lubrificat. cent. | [bar] | Order no.<br>Nº de Code |
|---|---|---|---|---|---|---|---|---|---|---|
| **d1** | **x2** | **x4** | **Spindel** | **T max** | **n max** | **i** | **Aussenkühlung** | **Innenkühlung** | **p** | **Bestellnummer** |
| 30 | 49,5 | 84,5 | WFB 20-12 | 10 | 8.000 | 1:1 | | | | MPU.Z22.B20.RA0.OR1-51 |

| | | | |
|---|---|---|---|
| **Passend für Maschine:**<br>suitable machines:<br>approprié pour la machine: | ECAS-12/20 | SR-20J/JN | SR-20TIV |
| | SB-12/20R | SR20-RIII | SR-32J/JN |
| | SR-10J | SR20-RII | SW-12RII |

| | |
|---|---|
| **Ähnlich OEM Nr.**<br>similar to OEM no.<br>semblable au OEM nombre | OR1-51 |

# Star

**Axial Bohr- und Fräskopf**
Axial drilling and milling head
Outil de perçage et de fraisage axiale

**WG 35**

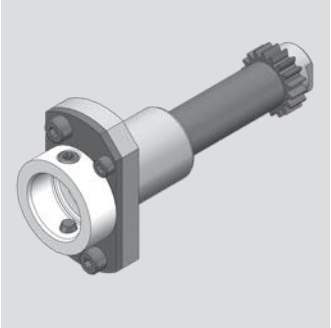

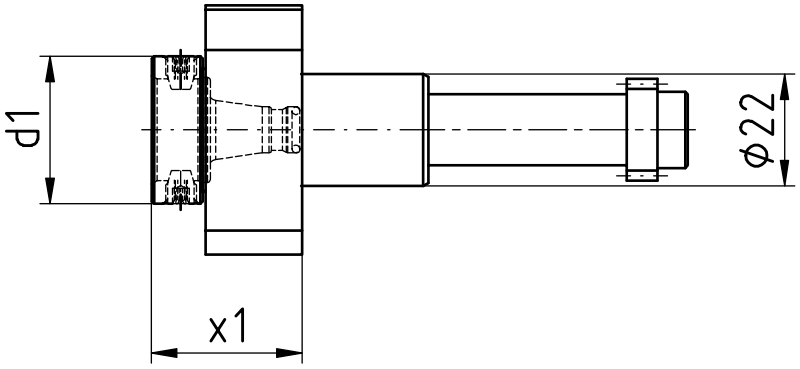


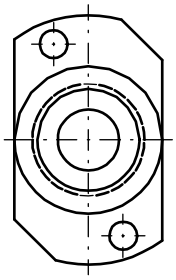

| [mm] | [mm] | Spindle<br>Broche | [Nm] | [rpm] | | Outside cooling<br>Lubrificat. ext. | Internal cooling<br>Lubrificat. cent. | [bar] | Order no.<br>Nº de Code |
|---|---|---|---|---|---|---|---|---|---|
| **d1** | **x1** | **Spindel** | **T max** | **n max** | **i** | **Aussenkühlung** | **Innenkühlung** | **p** | **Bestellnummer** |
| 29 | 29,5 | WFB 20-12 | 10 | 12.000 | 1:1 | | | | MPU.Z22.B20.101-52-00 |

| | |
|---|---|
| **Passend für Maschine:**<br>suitable machines:<br>approprié pour la machine: | SW-12RII |

| | |
|---|---|
| **Ähnlich OEM Nr.**<br>similar to OEM no.<br>semblable au OEM nombre | 101-52-00 |

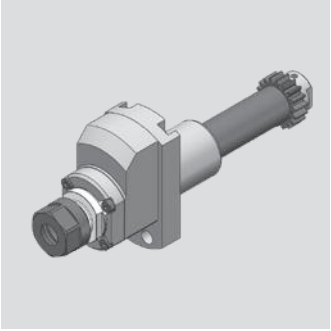

# Star

**Axial Bohr- und Fräskopf**
Axial drilling and milling head
Outil de perçage et de fraisage axiale

**WG 35**

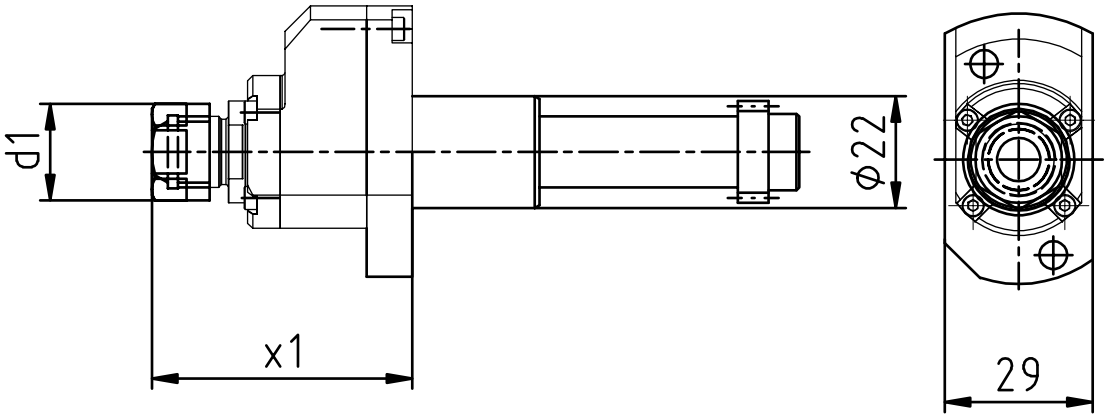


| [mm] | [mm] | Spindle<br>Broche | [Nm] | [rpm] | | Outside cooling<br>Lubrificat. ext. | Internal cooling<br>Lubrificat. cent. | [bar] | Order no.<br>Nº de Code |
|---|---|---|---|---|---|---|---|---|---|
| **d1** | **x1** | **Spindel** | **T max** | **n max** | **i** | **Aussenkühlung** | **Innenkühlung** | **p** | **Bestellnummer** |
| 19 | 51,2 | ER11 | 2 | 32.000 | 1:4 | | | | MPU.Z22.E11.BA0.101-52 |

| | |
|---|---|
| **Passend für Maschine:**<br>suitable machines:<br>approprié pour la machine: | SW-12RII |

| | |
|---|---|
| **Ähnlich OEM Nr.**<br>similar to OEM no.<br>semblable au OEM nombre | 101-52-00 |

# Star

**Axial Bohr- und Fräskopf**
Axial drilling and milling head
Outil de perçage et de fraisage axiale

**WG 35**

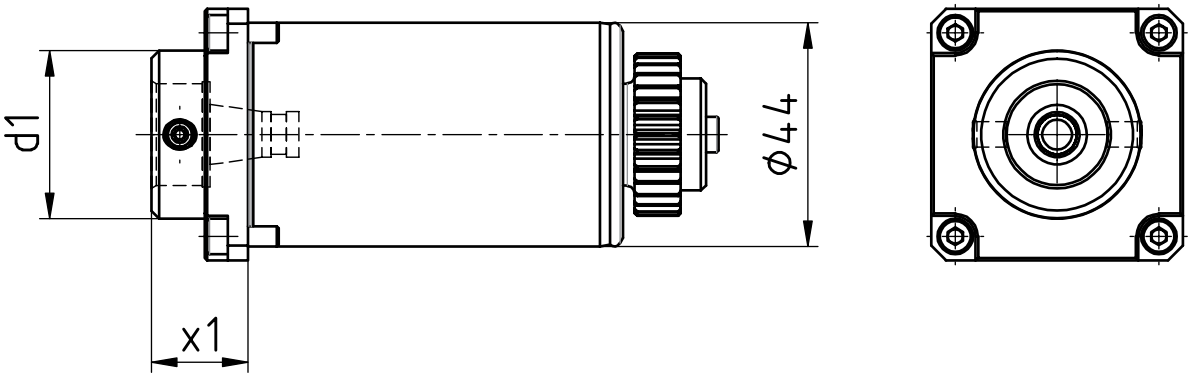


| [mm] | [mm] | Spindle<br>Broche | [Nm] | [rpm] | | Outside cooling<br>Lubrificat. ext. | Internal cooling<br>Lubrificat. cent. | [bar] | Order no.<br>Nº de Code |
|---|---|---|---|---|---|---|---|---|---|
| **d1** | **x1** | **Spindel** | **T max** | **n max** | **i** | **Aussenkühlung** | **Innenkühlung** | **p** | **Bestellnummer** |
| 30 | 19 | WFB 20-12 | 16 | 6.000 | 1:1 | | | | MPU.Z44.B20.101-68-00 |

| | |
|---|---|
| **Passend für Maschine:**<br>suitable machines:<br>approprié pour la machine: | SR-38(Type A/B) |

| | |
|---|---|
| **Ähnlich OEM Nr.**<br>similar to OEM no.<br>semblable au OEM nombre | 101-68-00 |

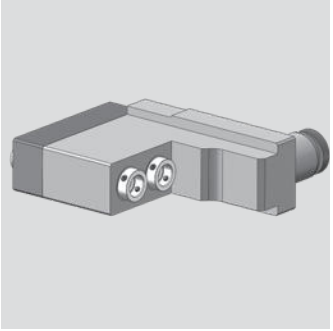

# Star

**Radial Bohr- und Fräskopf**
Radial drilling and milling head
Outil de perçage et de fraisage radiale

**WG 35**

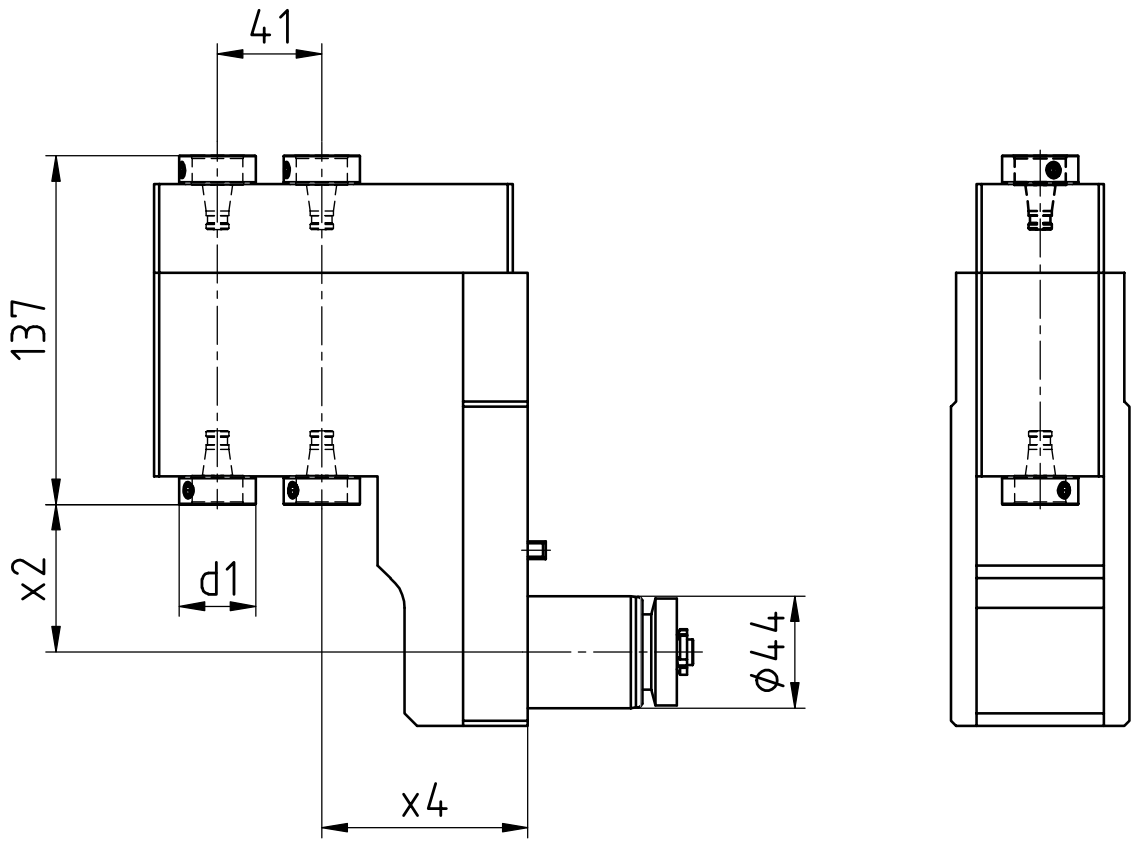


| [mm] | [mm] | | Spindle<br>Broche | [Nm] | [rpm] | | Outside cooling<br>Lubrificat. ext. | Internal cooling<br>Lubrificat. cent. | [bar] | Order no.<br>Nº de Code |
|---|---|---|---|---|---|---|---|---|---|---|
| **d1** | **x1** | | **Spindel** | **T max** | **n max** | **i** | **Aussenkühlung** | **Innenkühlung** | **p** | **Bestellnummer** |
| 30 | 53,5 | 81 | WFB 20-12 | 16 | 6.000 | 1:1 | | | | MPU.Z44.B20.101-69-00 |

| | |
|---|---|
| **Passend für Maschine:**<br>suitable machines:<br>approprié pour la machine: | SR-38(Type A/B) |

| | |
|---|---|
| **Ähnlich OEM Nr.**<br>similar to OEM no.<br>semblable au OEM nombre | 101-69-00 |

# Star

**Gewindewirbelapparat modular**
Thread whirling unit
Unité de tourbillonnement

**WG 35**

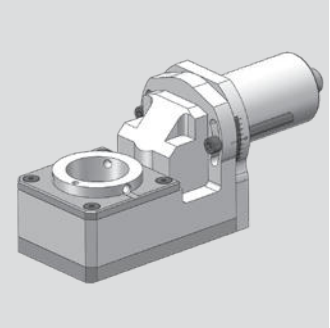

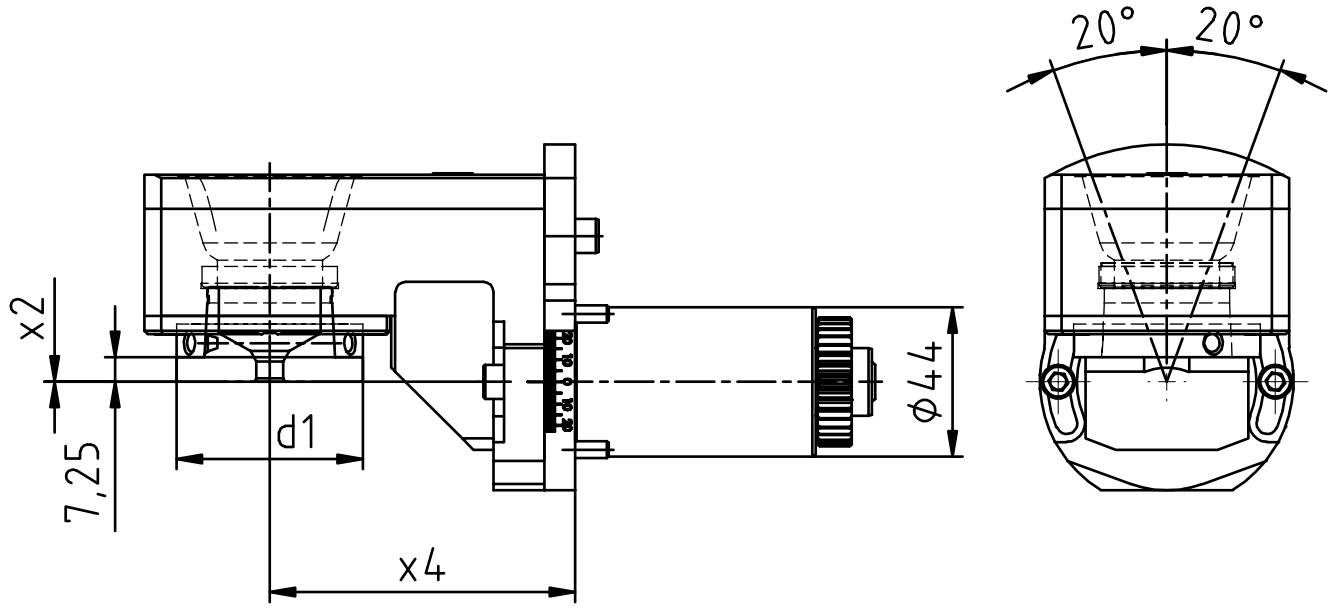


| [mm] | [mm] | [mm] | Spindle<br>Broche | [Nm] | [rpm] | | Outside cooling<br>Lubrificat. ext. | Internal cooling<br>Lubrificat. cent. | [bar] | Order no.<br>Nº de Code |
|---|---|---|---|---|---|---|---|---|---|---|
| **d1** | **x2** | **x4** | **Spindel** | **T max** | **n max** | **i** | **Aussenkühlung** | **Innenkühlung** | **p** | **Bestellnummer** |
| 54 | 0 | 90 | WFW 50 | 16 | 6.000 | 1:1 | x | | | MPU.Z44.M0800.SR38 |

| | |
|---|---|
| **Passend für Maschine:**<br>suitable machines:<br>approprié pour la machine: | SR-38(Type A/B) |

| | |
|---|---|
| **Ähnlich OEM Nr.**<br>similar to OEM no.<br>semblable au OEM nombre | 101-72-00 |

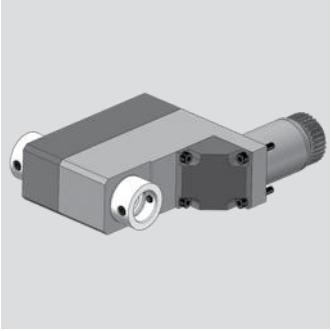

# Star

**Radial-Bohr- und Fräskopf (Mehrkantschlagen)**
radial drilling and milling head (polyhedral beat)
Outil Rotatif Radial de Pertage et de Fraisage (battement polyedrique)

**WG 35**

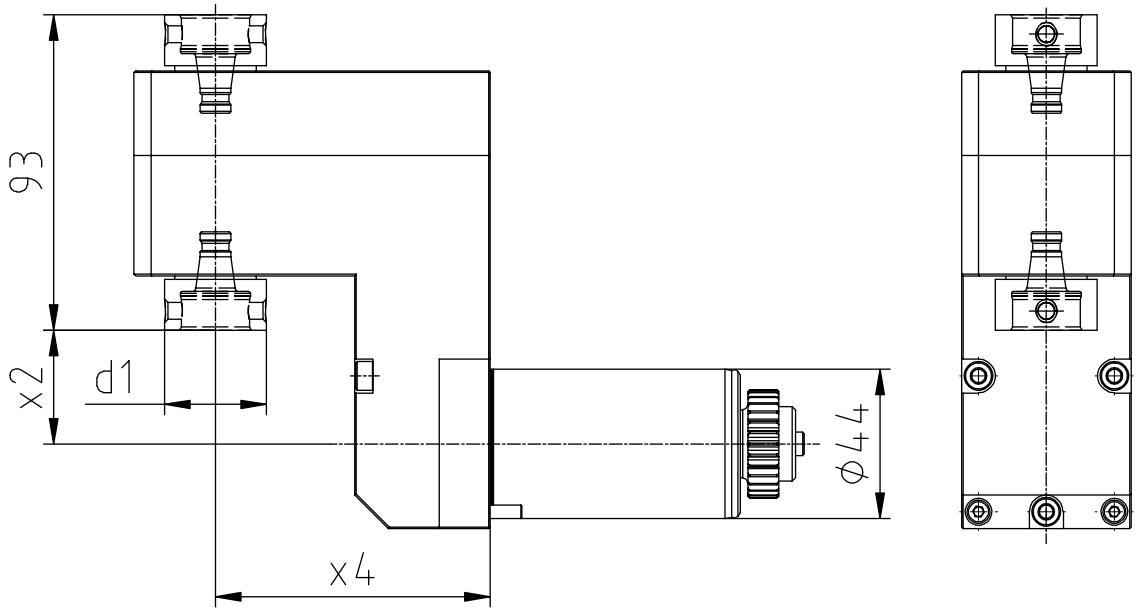


| [mm] | [mm] | [mm] | Spindle<br>Broche | [Nm] | [rpm] | | Outside cooling<br>Lubrificat. ext. | Internal cooling<br>Lubrificat. cent. | [bar] | Order no.<br>Nº de Code |
|---|---|---|---|---|---|---|---|---|---|---|
| **d1** | **x2** | **x4** | **Spindel** | **T max** | **n max** | **i** | **Aussenkühlung** | **Innenkühlung** | **p** | **Bestellnummer** |
| 30 | 33,5 | 81 | WFB 20-12 | 16 | 6.000 | 1:1 | | | | MPU.Z44.0900.SR38 |

| | |
|---|---|
| **Passend für Maschine:**<br>suitable machines:<br>approprié pour la machine: | SR-38 |

| | |
|---|---|
| **Ähnlich OEM Nr.**<br>similar to OEM no.<br>semblable au OEM nombre | 101-71-00 |

# Star

**Axial Bohr- und Fräskopf**
Axial drilling and milling head
Outil de perçage et de fraisage axiale

**WG 35**

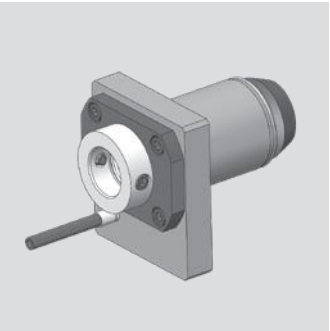

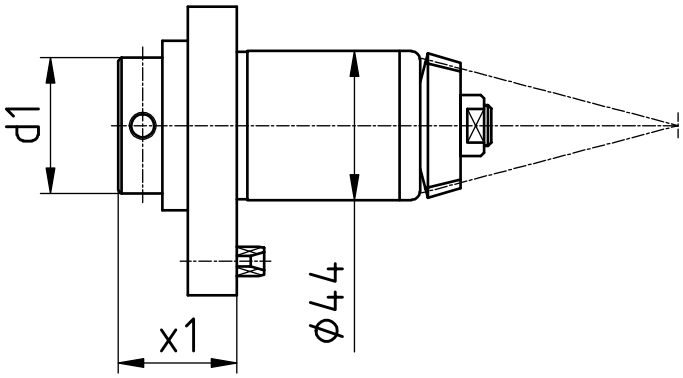


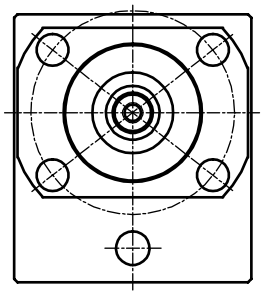

| [mm] | [mm] | Spindle<br>Broche | [Nm] | [rpm] | | Outside cooling<br>Lubrificat. ext. | Internal cooling<br>Lubrificat. cent. | [bar] | Order no.<br>Nº de Code |
|---|---|---|---|---|---|---|---|---|---|
| **d1** | **x1** | **Spindel** | **T max** | **n max** | **i** | **Aussenkühlung** | **Innenkühlung** | **p** | **Bestellnummer** |
| 40 | 35 | WFB 24-16 | 32 | 8.000 | 1:1 | | | | MPU.Z44.B24.201-50-00 |
| 40 | 35 | WFB 24-16 | 32 | 8.000 | 1:1 | x | x | 80 | MPU.Z44.B24.201-50-IK |

| | |
|---|---|
| **Passend für Maschine:**<br>suitable machines:<br>approprié pour la machine: | ECAS-32T<br>ST-38<br>SV-38R |

| | |
|---|---|
| **Ähnlich OEM Nr.**<br>similar to OEM no.<br>semblable au OEM nombre | 201-50-00 |

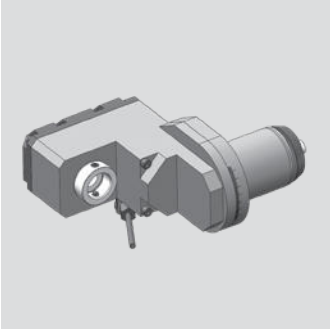

# Star

**Radial Bohr- und Fräskopf**
Radial drilling and milling head
Outil de perçage et de fraisage radiale

**WG 35**

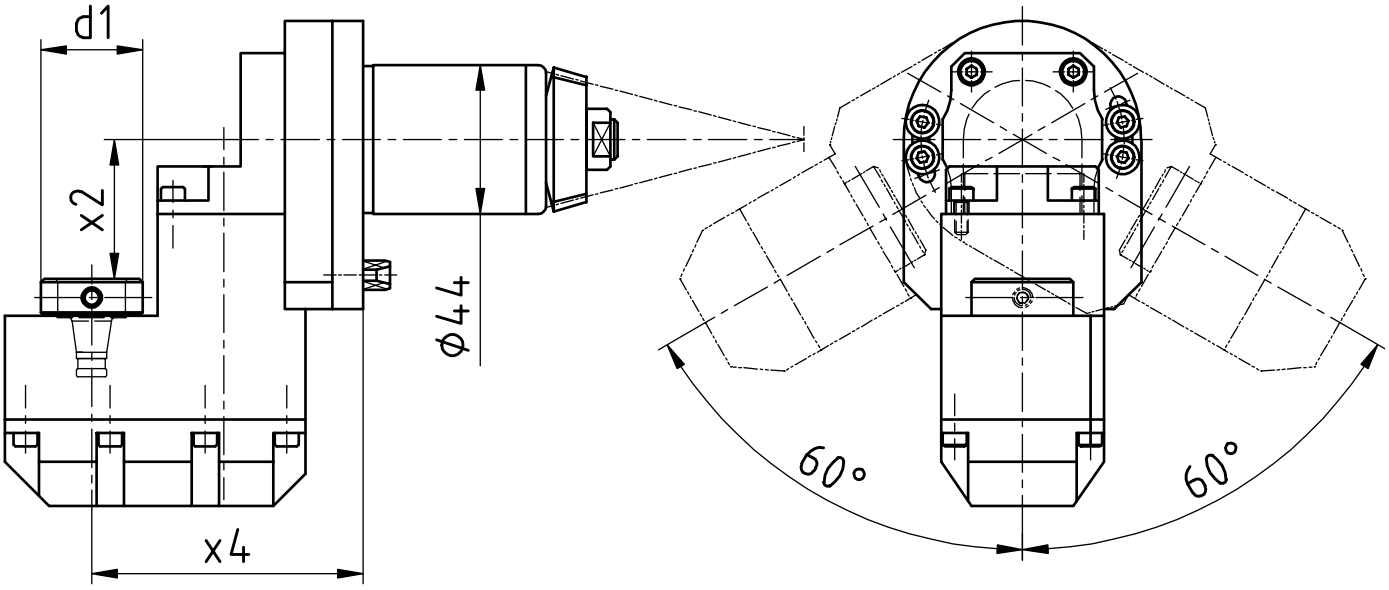


| [mm] | [mm] | [mm] | Spindle<br>Broche | [Nm] | [rpm] | | Outside cooling<br>Lubrificat. ext. | Internal cooling<br>Lubrificat. cent. | [bar] | Order no.<br>Nº de Code |
|---|---|---|---|---|---|---|---|---|---|---|
| **d1** | **x2** | **x4** | **Spindel** | **T max** | **n max** | **i** | **Aussenkühlung** | **Innenkühlung** | **p** | **Bestellnummer** |
| 30 | 41 | 80 | WFB 20-12 | 10 | 8.000 | 1:1 | | | | MPU.Z44.B20.431-55-00 |
| 30 | 41 | 80 | WFB 20-12 | 10 | 8.000 | 1:1 | x | x | 80 | MPU.Z44.B20.431-55-IK |

| | |
|---|---|
| **Passend für Maschine:**<br>suitable machines:<br>approprié pour la machine: | ECAS-32T<br>ST-38<br>SV-38R |

| | |
|---|---|
| **Ähnlich OEM Nr.**<br>similar to OEM no.<br>semblable au OEM nombre | 431-55-00 |

# Star

**Radial Bohr- und Fräskopf**
Radial drilling and milling head
Outil de perçage et de fraisage radiale

**WG 35**

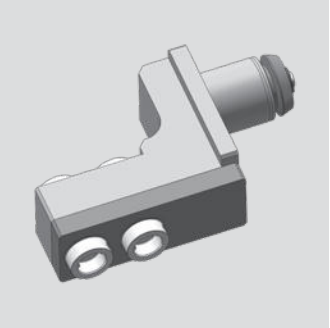

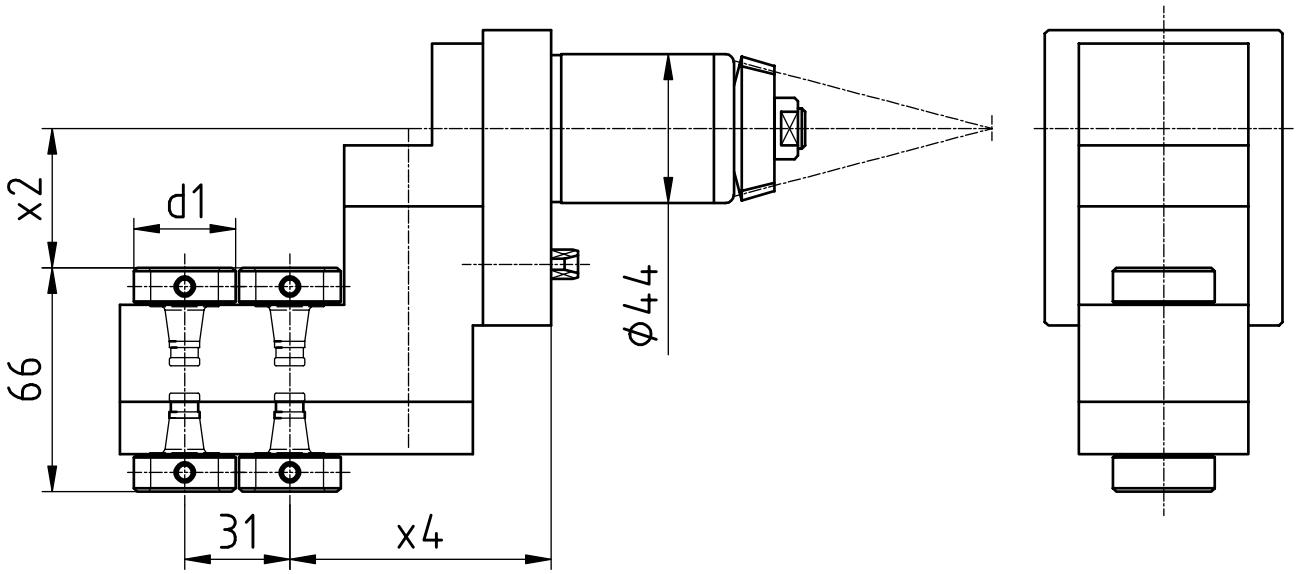


| [mm] | [mm] | [mm] | Spindle<br>Broche | [Nm] | [rpm] | | Outside cooling<br>Lubrificat. ext. | Internal cooling<br>Lubrificat. cent. | [bar] | Order no.<br>Nº de Code |
|---|---|---|---|---|---|---|---|---|---|---|
| **d1** | **x2** | **x4** | **Spindel** | **T max** | **n max** | **i** | **Aussenkühlung** | **Innenkühlung** | **p** | **Bestellnummer** |
| 30 | 41 | 77 | WFB 20-12 | 10 | 8.000 | 1:1 | | | | MPU.Z44.B20.431-59-00 |

| | |
|---|---|
| **Passend für Maschine:**<br>suitable machines:<br>approprié pour la machine: | ECAS-32T<br>ST-38<br>SV-38R |

| | |
|---|---|
| **Ähnlich OEM Nr.**<br>similar to OEM no.<br>semblable au OEM nombre | 431-59-00 |

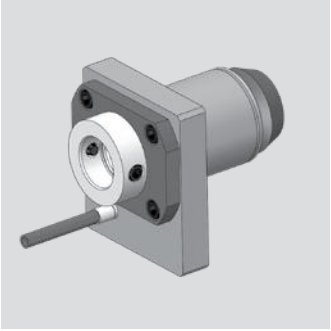

# Star

**Axial Bohr- und Fräskopf**
Axial drilling and milling head
Outil de perçage et de fraisage axiale

**WG 35**

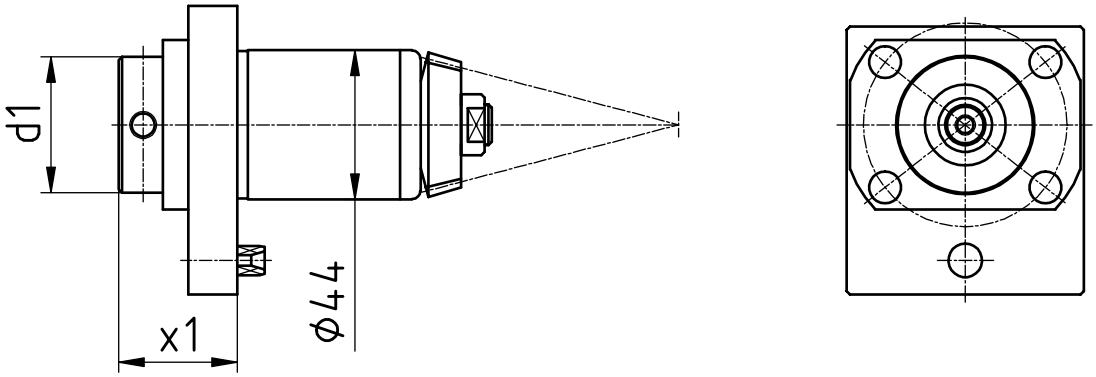


| [mm] | [mm] | Spindle<br>Broche | [Nm] | [rpm] | | Outside cooling<br>Lubrificat. ext. | Internal cooling<br>Lubrificat. cent. | [bar] | Order no.<br>Nº de Code |
|---|---|---|---|---|---|---|---|---|---|
| **d1** | **x1** | **Spindel** | **T max** | **n max** | **i** | **Aussenkühlung** | **Innenkühlung** | **p** | **Bestellnummer** |
| 40 | 35 | WFB 24-16 | 32 | 8.000 | 1:1 | | | | MPU.Z44.B24.221-50-00 |
| 40 | 35 | WFB 24-16 | 32 | 8.000 | 1:1 | x | x | 80 | MPU.Z44.B24.221-50-IK |

| | | |
|---|---|---|
| **Passend für Maschine:**<br>suitable machines:<br>approprié pour la machine: | ST20<br>ECAS-20T<br>SV-12 | SV-20<br>SV-20R<br>SV-32JII |

| | |
|---|---|
| **Ähnlich OEM Nr.**<br>similar to OEM no.<br>semblable au OEM nombre | 221-50-00 |

# Star

**Axial Bohr- und Fräskopf**
Axial drilling and milling head
Outil de perçage et de fraisage axiale

**WG 35**

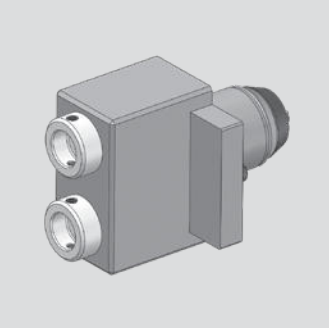

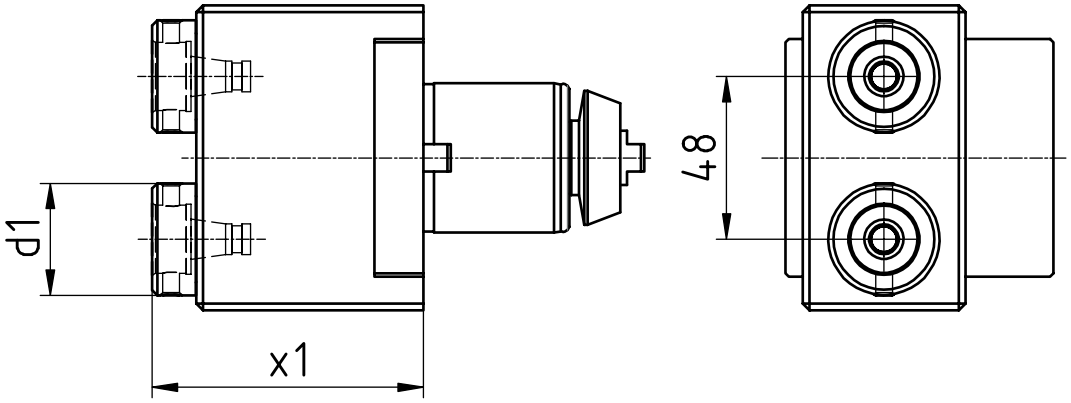


| [mm] | [mm] | Spindle<br>Broche | [Nm] | [rpm] | | Outside cooling<br>Lubrificat. ext. | Internal cooling<br>Lubrificat. cent. | [bar] | Order no.<br>Nº de Code |
|---|---|---|---|---|---|---|---|---|---|
| **d1** | **x1** | **Spindel** | **T max** | **n max** | **i** | **Aussenkühlung** | **Innenkühlung** | **p** | **Bestellnummer** |
| 33 | 73,25 | WFB 20-12 | 16 | 8.000 | 1:1 | | | | MPU.Z44.B20.421-52-00 |
| 33 | 73,25 | WFB 20-12 | 16 | 8.000 | 1:1 | x | x | 80 | MPU.Z44.B20.421-52-IK |

| | | |
|---|---|---|
| **Passend für Maschine:**<br>suitable machines:<br>approprié pour la machine: | ST20<br>ECAS-20T<br>SV-12 | SV-20<br>SV-20R<br>SV-32JII |

| | |
|---|---|
| **Ähnlich OEM Nr.**<br>similar to OEM no.<br>semblable au OEM nombre | 421-52-00 |

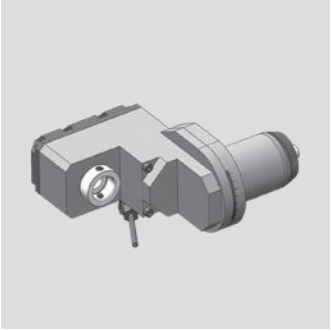

# Star

**Radial Bohr- und Fräskopf**
Radial drilling and milling head
Outil de perçage et de fraisage radiale

**WG 35**

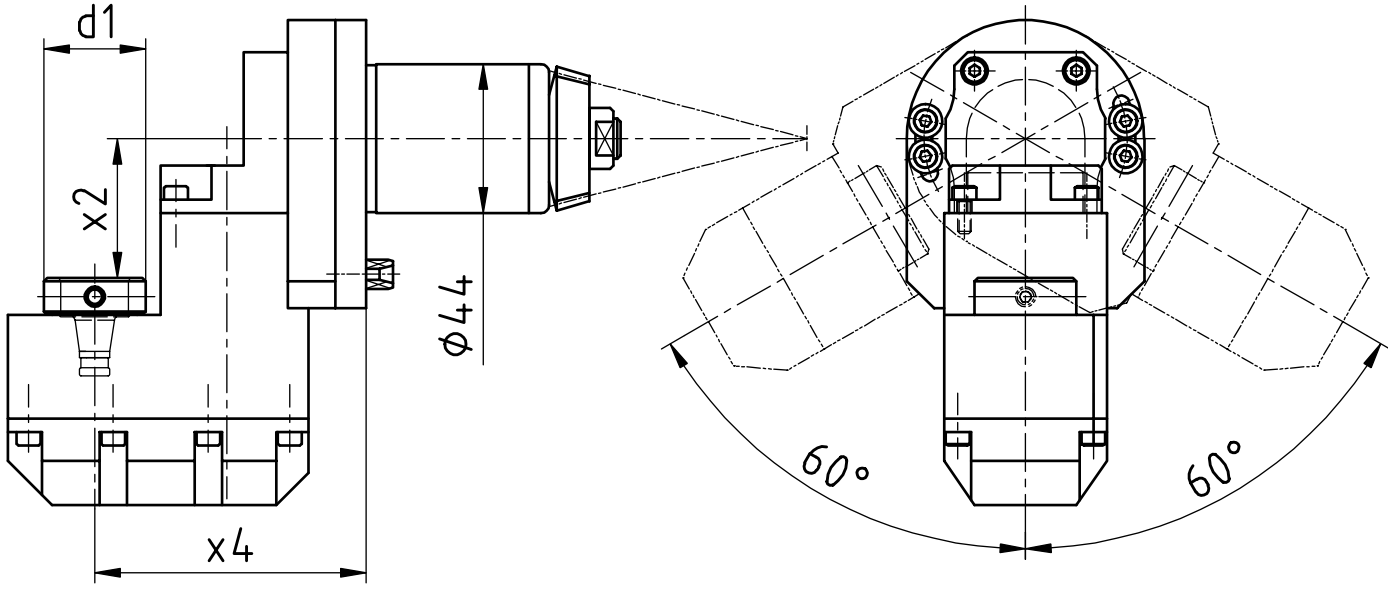


| [mm] | [mm] | [mm] | Spindle<br>Broche | [Nm] | [rpm] | | Outside cooling<br>Lubrificat. ext. | Internal cooling<br>Lubrificat. cent. | [bar] | Order no.<br>Nº de Code |
|---|---|---|---|---|---|---|---|---|---|---|
| **d1** | **x2** | **x4** | **Spindel** | **T max** | **n max** | **i** | **Aussenkühlung** | **Innenkühlung** | **p** | **Bestellnummer** |
| 30 | 41 | 80 | WFB 20-12 | 10 | 8.000 | 1:1 | | | | MPU.Z44.B20.421-55-00 |
| 30 | 41 | 80 | WFB 20-12 | 10 | 8.000 | 1:1 | x | x | 80 | MPU.Z44.B20.421-55-IK |

| | | |
|---|---|---|
| **Passend für Maschine:**<br>suitable machines:<br>approprié pour la machine: | ST20<br>ECAS-20T<br>SV-12 | SV-20<br>SV-20R<br>SV-32JII |

| | |
|---|---|
| **Ähnlich OEM Nr.**<br>similar to OEM no.<br>semblable au OEM nombre | 421-55-00 |

# Star

**Radial Bohr- und Fräskopf**
Radial drilling and milling head
Outil de perçage et de fraisage radiale

**WG 35**

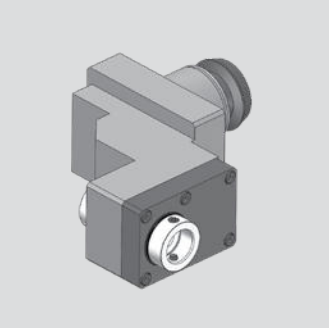

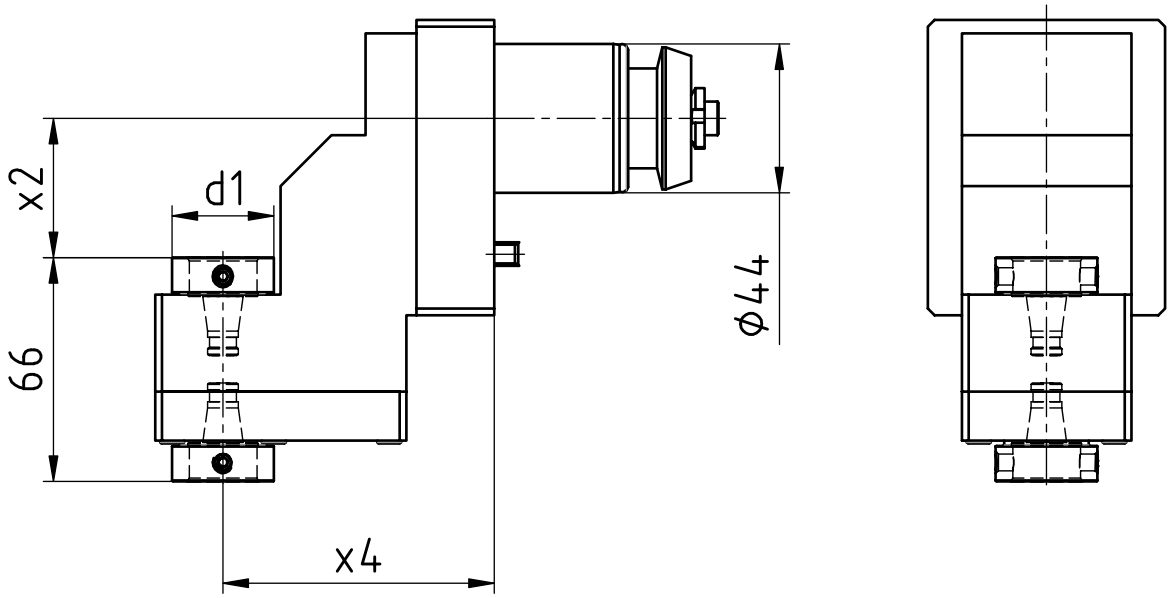


| [mm] | [mm] | [mm] | Spindle<br>Broche | [Nm] | [rpm] | | Outside cooling<br>Lubrificat. ext. | Internal cooling<br>Lubrificat. cent. | [bar] | Order no.<br>Nº de Code |
|---|---|---|---|---|---|---|---|---|---|---|
| **d1** | **x2** | **x4** | **Spindel** | **T max** | **n max** | **i** | **Aussenkühlung** | **Innenkühlung** | **p** | **Bestellnummer** |
| 30 | 41 | 80 | WFB 20-12 | 13 | 8.000 | 1:1 | | | | MPU.Z44.B20.221-56-00 |

| | | | |
|---|---|---|---|
| **Passend für Maschine:**<br>suitable machines:<br>approprié pour la machine: | ECAS-12/20 | SR-20J/ JN | SR-20RIV |
| | SB-12/20R | SR-20RIII | SR-32J/ JN |
| | SR-10J | SR-20RII | SW-12RII |

| | |
|---|---|
| **Ähnlich OEM Nr.**<br>similar to OEM no.<br>semblable au OEM nombre | 221-56-00 |

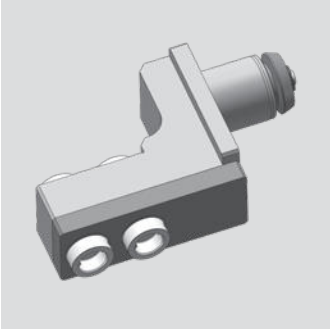

# Star

**Radial Bohr- und Fräskopf**
Radial drilling and milling head
Outil de perçage et de fraisage radiale

**WG 35**

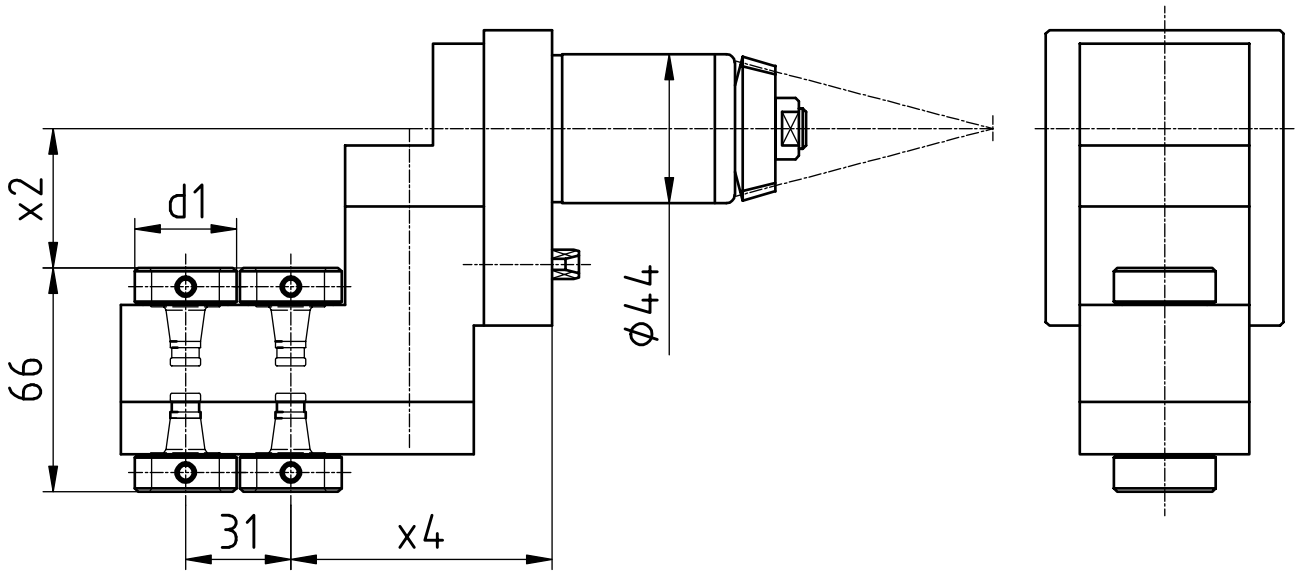


| [mm] | [mm] | [mm] | Spindle<br>Broche | [Nm] | [rpm] | | Outside cooling<br>Lubrificat. ext. | Internal cooling<br>Lubrificat. cent. | [bar] | Order no.<br>Nº de Code |
|---|---|---|---|---|---|---|---|---|---|---|
| **d1** | **x2** | **x4** | **Spindel** | **T max** | **n max** | **i** | **Aussenkühlung** | **Innenkühlung** | **p** | **Bestellnummer** |
| 30 | 41 | 77 | WFB 20-12 | 10 | 8.000 | 1:1 | | | | MPU.Z44.B20.421-59-00 |

| | | |
|---|---|---|
| **Passend für Maschine:**<br>suitable machines:<br>approprié pour la machine: | ST20<br>ECAS-20T<br>SV-12 | SV-20<br>SV-20R<br>SV-32JII |

| | |
|---|---|
| **Ähnlich OEM Nr.**<br>similar to OEM no.<br>semblable au OEM nombre | 421-59-00 |

# Star

**Axial Bohr- und Fräskopf**
Axial drilling and milling head
Outil de perçage et de fraisage axiale

**WG 35**

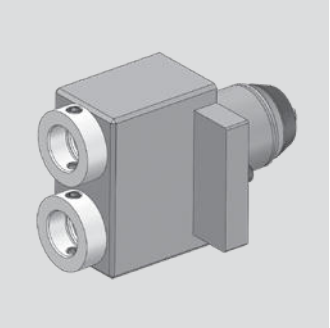

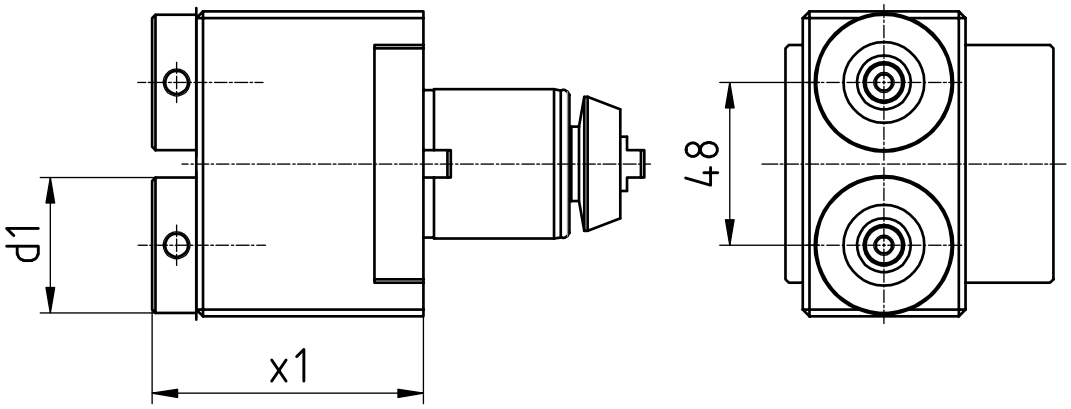


| [mm] | [mm] | Spindle<br>Broche | [Nm] | [rpm] | | Outside cooling<br>Lubrificat. ext. | Internal cooling<br>Lubrificat. cent. | [bar] | Order no.<br>Nº de Code |
|---|---|---|---|---|---|---|---|---|---|
| **d1** | **x1** | **Spindel** | **T max** | **n max** | **i** | **Aussenkühlung** | **Innenkühlung** | **p** | **Bestellnummer** |
| 40 | 73,25 | WFB 24-16 | 16 | 8.000 | 1:1 | | | | MPU.Z44.B24.421-51-00 |
| 40 | 73,25 | WFB 24-16 | 16 | 8.000 | 1:1 | x | x | 80 | MPU.Z44.B24.421-51-IK |

| | | |
|---|---|---|
| **Passend für Maschine:**<br>suitable machines:<br>approprié pour la machine: | ST20<br>ECAS-20T<br>SV-2 | SV-20<br>SV-20R<br>SV-32JII |

| | |
|---|---|
| **Ähnlich OEM Nr.**<br>similar to OEM no.<br>semblable au OEM nombre | 421-51-00 |

Modulare Aggregatetechnik

# TORNOS

## Katalog TO-03

# Inhaltsverzeichnis für TORNOS

Table of contents for TORNOS
Table des matiérs pour TORNOS


| Beschreibung / Description | Seite / Page |
|---|---|
| **TORNOS – EvoDECO** | **7.1 - 7.35** |
| **TORNOS – Gamma** | **7.36 - 7.42** |
| **TORNOS – Swiss Baureihen** | **7.43 - 7.53** |

# Tornos - EvoDECO

**Axial Bohr- und Fräskopf**
Axial drilling and milling head
Outil de perçage et de fraisage axiale

**WG 35**

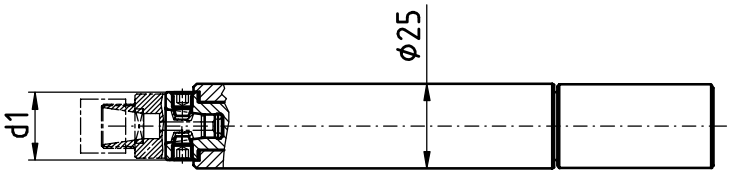


| [mm]<br>**d1** | Spindle<br>Broche<br>**Spindel** | [Nm]<br>**T max** | [rpm]<br>**n max** | **i** | Outside cooling<br>Lubrificat. ext.<br>**Aussenkühlung** | Internal cooling<br>Lubrificat. cent.<br>**Innenkühlung** | [bar]<br>**p** | Order no.<br>Nº de Code<br>**Bestellnummer** |
|---|---|---|---|---|---|---|---|---|
| 20 | WF-Micro | 6 | 12.000 | 1:1 | | | | MPU.TO.WFM.0110.DE10 |

| | |
|---|---|
| **Passend für Maschine:**<br>suitable machines:<br>approprié pour la machine: | DECO 10<br>EvoDECO 10/10<br>EvoDECO 10/8 |

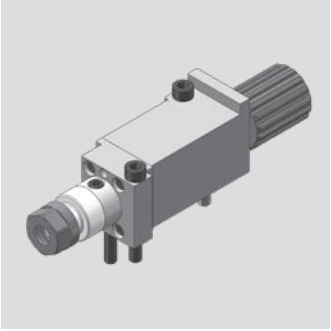

# Tornos - EvoDECO

**Axial Bohr- und Fräskopf**
Axial drilling and milling head
Outil de perçage et de fraisage axiale

**WG 35**

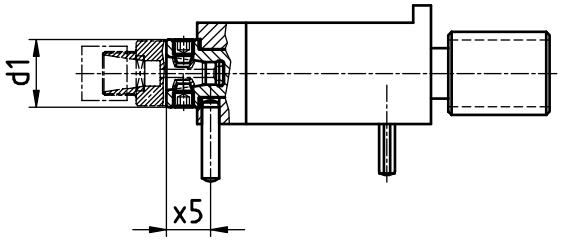


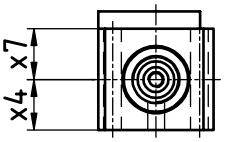


| [mm] | [mm] | [mm] | [mm] | Spindle<br>Broche | [Nm] | [rpm] | | Outside cooling<br>Lubrificat. ext. | Internal cooling<br>Lubrificat. cent. | [bar] | Order no.<br>Nº de Code |
|---|---|---|---|---|---|---|---|---|---|---|---|
| **d1** | **x4** | **x5** | **x7** | **Spindel** | **T max** | **n max** | **i** | **Aussenkühlung** | **Innenkühlung** | **p** | **Bestellnummer** |
| 20 | 15 | 13 | 15 | WF-Micro | 6 | 12.000 | 1:1 | | | | MPU.TO.WFM.0115.DE10 |

| | |
|---|---|
| **Passend für Maschine:**<br>suitable machines:<br>approprié pour la machine: | DECO 10<br>EvoDECO 10/10<br>EvoDECO 10/8 |

# Tornos - EvoDECO

**Radial Bohr- und Fräskopf**
Radial drilling and milling head
Outil de perçage et de fraisage radiale

**WG 35**

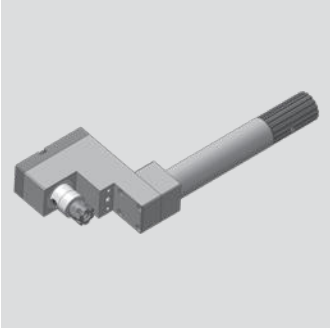

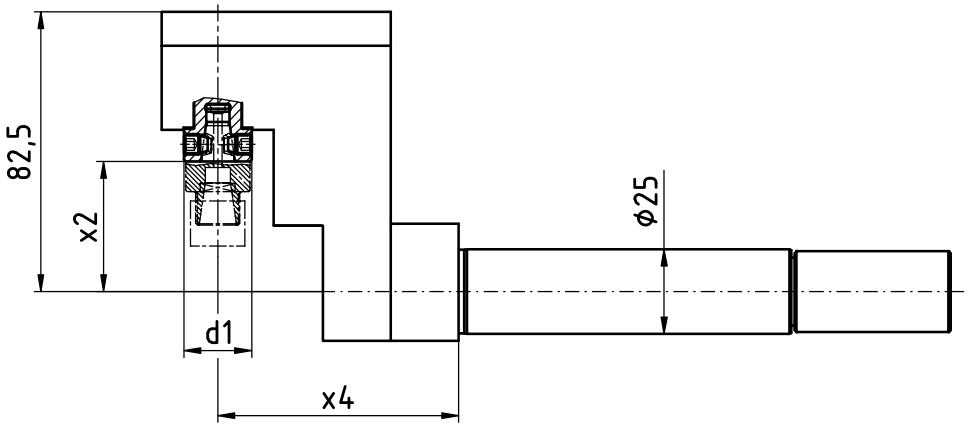


| [mm] | [mm] | [mm] | Spindle<br>Broche | [Nm] | [rpm] | | Outside cooling<br>Lubrificat. ext. | Internal cooling<br>Lubrificat. cent. | [bar] | Order no.<br>Nº de Code |
|---|---|---|---|---|---|---|---|---|---|---|
| **d1** | **x2** | **x4** | **Spindel** | **T max** | **n max** | **i** | **Aussenkühlung** | **Innenkühlung** | **p** | **Bestellnummer** |
| 20 | 38,4 | 71 | WF-Micro | 6 | 12.000 | 1:1 | | | | MPU.TO.WFM.0210.DE10 |

| | |
|---|---|
| **Passend für Maschine:**<br>suitable machines:<br>approprié pour la machine: | DECO 10<br>EvoDECO 10/10<br>EvoDECO 10/8 |

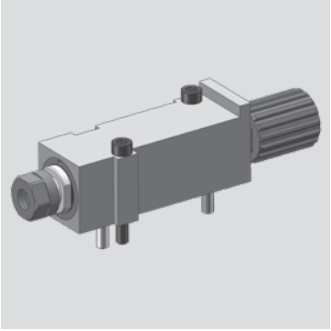

# Tornos - EvoDECO

**Axial Bohr- und Fräskopf**
Axial drilling and milling head
Outil de perçage et de fraisage axiale

**WG 35**

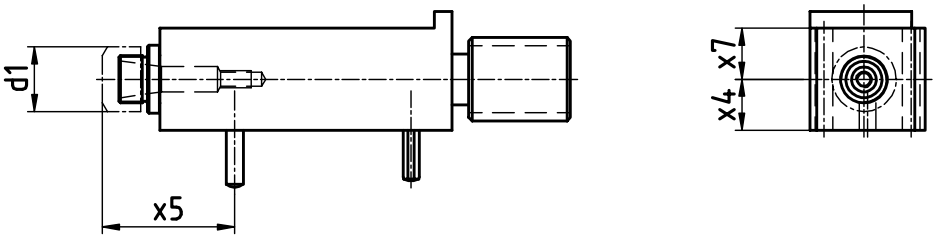


| [mm] | [mm] | [mm] | [mm] | Spindle<br>Broche | [Nm] | [rpm] | | Outside cooling<br>Lubrificat. ext. | Internal cooling<br>Lubrificat. cent. | [bar] | Order no.<br>Nº de Code |
|---|---|---|---|---|---|---|---|---|---|---|---|
| **d1** | **x4** | **x5** | **x7** | **Spindel** | **T max** | **n max** | **i** | **Aussenkühlung** | **Innenkühlung** | **p** | **Bestellnummer** |
| 19 | 39 | 15 | 15 | ER11 | 6 | 12.000 | 1:1 | | | | MPU.TO.0115.DE10 |
| 19 | 39 | 30 | 15 | ER11 | 6 | 12.000 | 1:1 | | | | MPU.TO.0130.DE10 |

| | |
|---|---|
| **Passend für Maschine:**<br>suitable machines:<br>approprié pour la machine: | DECO 10<br>EvoDECO 10/10<br>EvoDECO 10/8 |

# Tornos - EvoDECO

**Radial Bohr- und Fräskopf**
Radial drilling and milling head
Outil de perçage et de fraisage radiale

**WG 35**

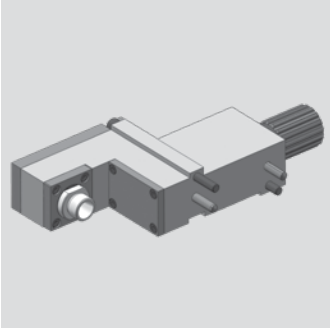

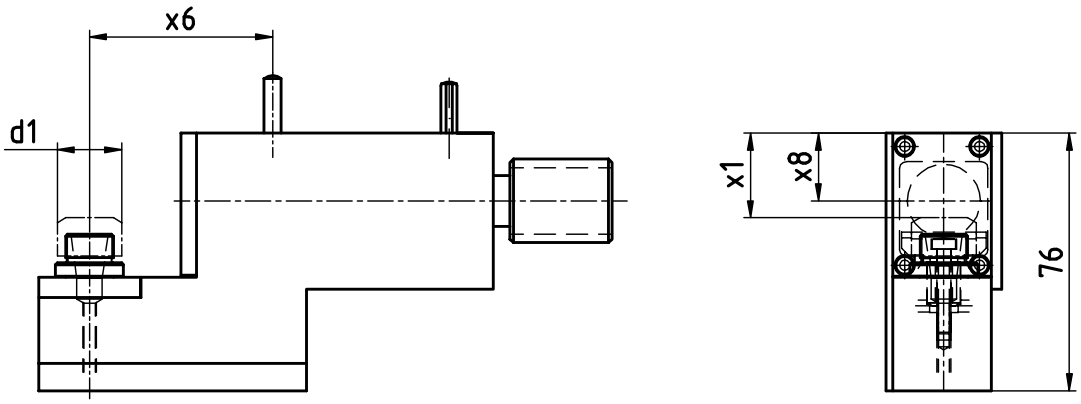


| [mm] | [mm] | [mm] | [mm] | Spindle<br>Broche | [Nm] | [rpm] | | Outside cooling<br>Lubrificat. ext. | Internal cooling<br>Lubrificat. cent. | [bar] | Order no.<br>Nº de Code |
|---|---|---|---|---|---|---|---|---|---|---|---|
| **d1** | **x1** | **x6** | **x8** | **Spindel** | **T max** | **n max** | **i** | **Aussenkühlung** | **Innenkühlung** | **p** | **Bestellnummer** |
| 19 | 25 | 54 | 20 | ER11 | 6 | 12.000 | 1:1 | | | | MPU.T0.0200.DE10 |

| | |
|---|---|
| **Passend für Maschine:**<br>suitable machines:<br>approprié pour la machine: | DECO 10<br>EvoDECO 10/10<br>EvoDECO 10/8 |

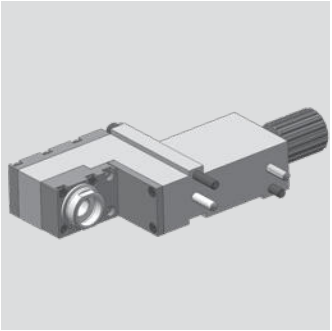

# Tornos - EvoDECO

**Radial Bohr- und Fräskopf**
Radial drilling and milling head
Outil de perçage et de fraisage radiale

**WG 35**

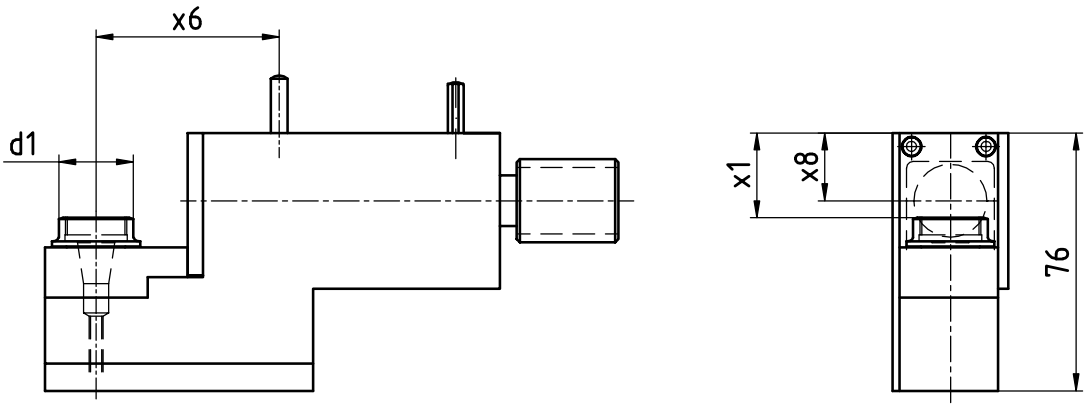


| [mm] | [mm] | [mm] | [mm] | Spindle<br>Broche | [Nm] | [rpm] | | Outside cooling<br>Lubrificat. ext. | Internal cooling<br>Lubrificat. cent. | [bar] | Order no.<br>Nº de Code |
|---|---|---|---|---|---|---|---|---|---|---|---|
| **d1** | **x1** | **x6** | **x8** | **Spindel** | **T max** | **n max** | **i** | **Aussenkühlung** | **Innenkühlung** | **p** | **Bestellnummer** |
| 22 | 25 | 54 | 20 | ER11 | 6 | 12.000 | 1:1 | | | | MPU.TO.0200.DE10.X2 |

| | |
|---|---|
| **Passend für Maschine:**<br>suitable machines:<br>approprié pour la machine: | DECO 10<br>EvoDECO 10/10<br>EvoDECO 10/8 |

# Tornos - EvoDECO

**Axial Bohr- und Fräskopf**
Axial drilling and milling head
Outil de perçage et de fraisage axiale

**WG 35**

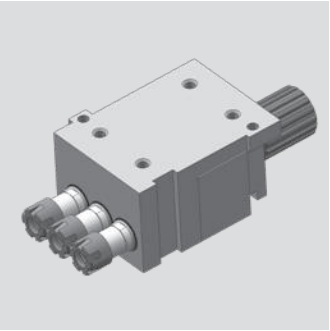

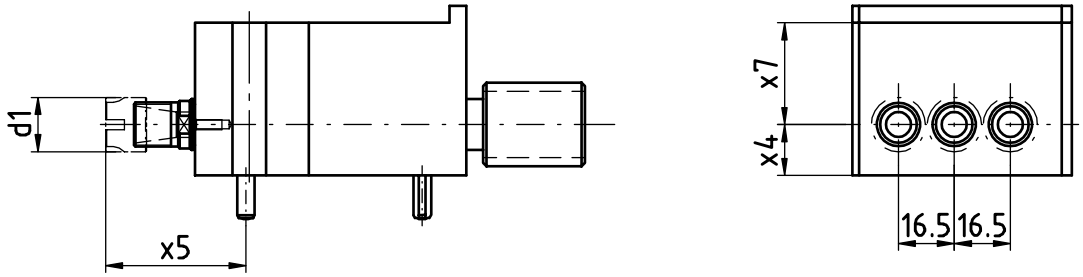


| [mm] | [mm] | [mm] | [mm] | Spindle<br>Broche | [Nm] | [rpm] | | Outside cooling<br>Lubrificat. ext. | Internal cooling<br>Lubrificat. cent. | [bar] | Order no.<br>Nº de Code |
|---|---|---|---|---|---|---|---|---|---|---|---|
| **d1** | **x4** | **x5** | **x7** | **Spindel** | **T max** | **n max** | **i** | **Aussenkühlung** | **Innenkühlung** | **p** | **Bestellnummer** |
| 16 | 15 | 41,3 | 30 | ER11 MINI | 5 | 12.000 | 1:1 | | | | MPU.TO.1103.DE10 |
| 16 | 30 | 41,3 | 30 | ER11 MINI | 5 | 12.000 | 1:1 | | | | MPU.TO.1203.DE10 |

| | |
|---|---|
| **Passend für Maschine:**<br>suitable machines:<br>approprié pour la machine: | DECO 10<br>EvoDECO 10/10<br>EvoDECO 10/8 |

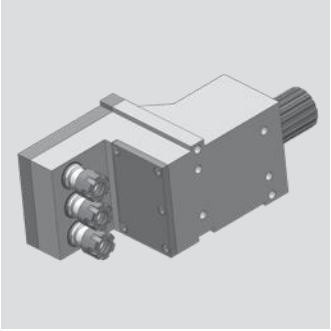

# Tornos - EvoDECO

**Radial Bohr- und Fräskopf**
Radial drilling and milling head
Outil de perçage et de fraisage radiale

**WG 35**

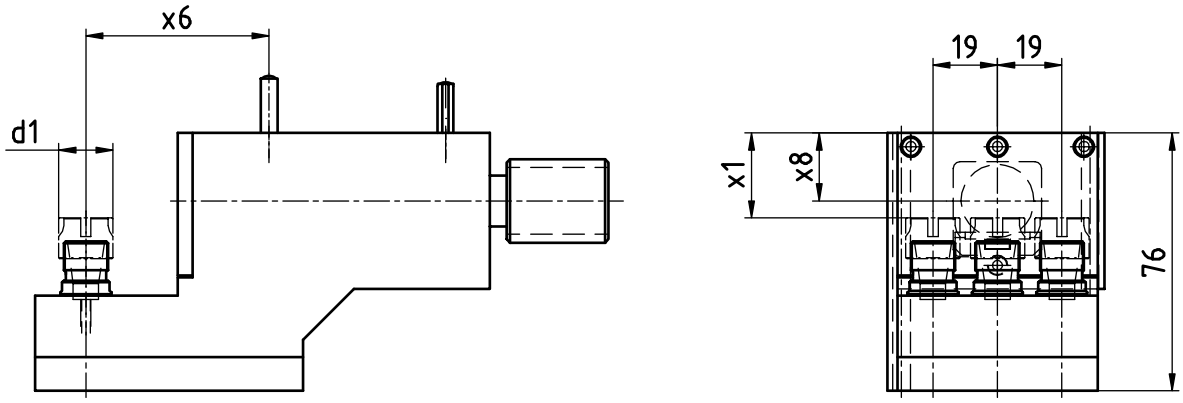


| [mm] | [mm] | [mm] | [mm] | Spindle<br>Broche | [Nm] | [rpm] | | Outside cooling<br>Lubrificat. ext. | Internal cooling<br>Lubrificat. cent. | [bar] | Order no.<br>Nº de Code |
|---|---|---|---|---|---|---|---|---|---|---|---|
| **d1** | **x1** | **x6** | **x8** | **Spindel** | **T max** | **n max** | **i** | **Aussenkühlung** | **Innenkühlung** | **p** | **Bestellnummer** |
| 16 | 25 | 54 | 20 | ER11 MINI | 6 | 12.000 | 1:1 | | | | MPU.TO.2103.DE10 |

| | |
|---|---|
| **Passend für Maschine:**<br>suitable machines:<br>approprié pour la machine: | DECO 10<br>EvoDECO 10/10<br>EvoDECO 10/8 |

# Tornos - EvoDECO

**Axial Bohr- und Fräskopf**
Axial drilling and milling head
Outil de perçage et de fraisage axiale

**WG 35**

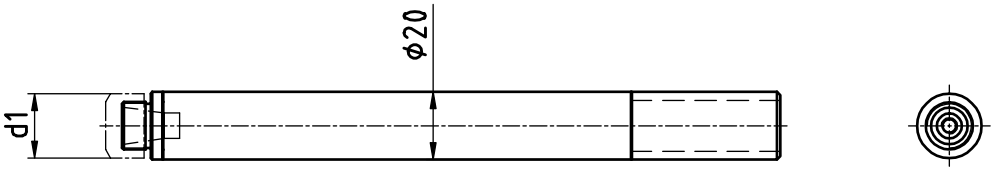


| [mm] | Spindle | [Nm] | [rpm] | | Outside cooling | Internal cooling | [bar] | Order no. |
|---|---|---|---|---|---|---|---|---|
| | Broche | | | | Lubrificat. ext. | Lubrificat. cent. | | Nº de Code |
| **d1** | **Spindel** | **T max** | **n max** | **i** | **Aussenkühlung** | **Innenkühlung** | **p** | **Bestellnummer** |
| 19 | ER11 | 6 | 12.000 | 1:1 | | | | MPU.T0.0120.DE10 |

| | |
|---|---|
| **Passend für Maschine:**<br>suitable machines:<br>approprié pour la machine: | DECO 10<br>EvoDECO 10/10<br>EvoDECO 10/8 |

# Tornos - EvoDECO

**Axial Bohr- und Fräskopf**
Axial drilling and milling head
Outil de perçage et de fraisage axiale

**WG 35**

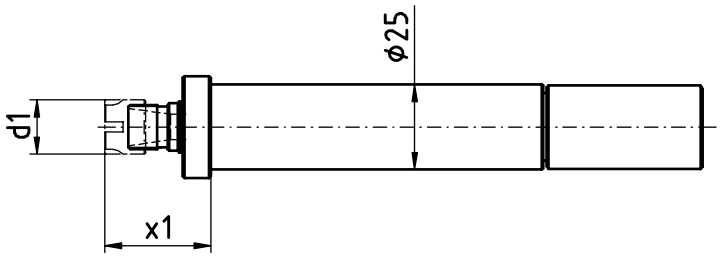


| [mm] | [mm] | Spindle<br>Broche | [Nm] | [rpm] | | Outside cooling<br>Lubrificat. ext. | Internal cooling<br>Lubrificat. cent. | [bar] | Order no.<br>Nº de Code |
|---|---|---|---|---|---|---|---|---|---|
| **d1** | **x1** | **Spindel** | **T max** | **n max** | **i** | **Aussenkühlung** | **Innenkühlung** | **p** | **Bestellnummer** |
| 16 | 31,3 | ER11 MINI | 6 | 12.000 | 1:1 | | | | MPU.TO.0110.DE10 |

| | |
|---|---|
| **Passend für Maschine:**<br>suitable machines:<br>approprié pour la machine: | DECO 10<br>EvoDECO 10/10<br>EvoDECO 10/8 |

# Tornos - EvoDECO

**Radial Bohr- und Fräskopf**
Radial drilling and milling head
Outil de perçage et de fraisage radiale

**WG 35**

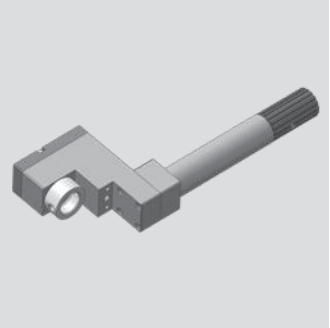

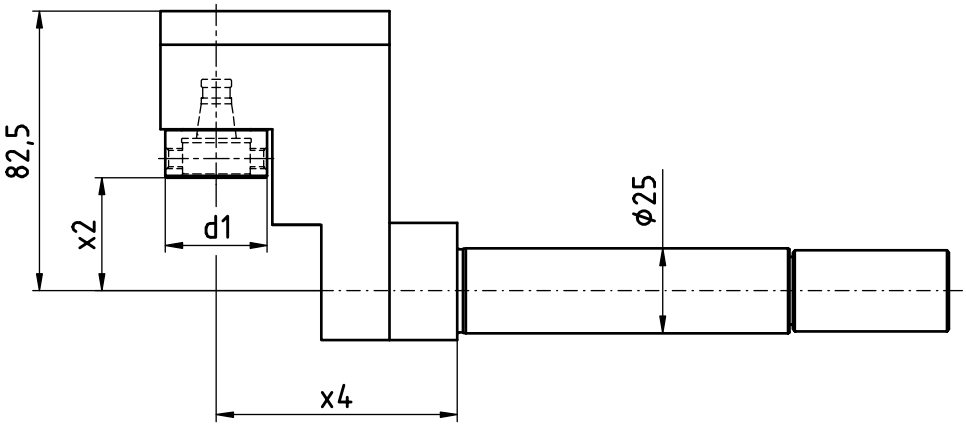


| [mm] | [mm] | [mm] | Spindle<br>Broche | [Nm] | [rpm] | | Outside cooling<br>Lubrificat. ext. | Internal cooling<br>Lubrificat. cent. | [bar] | Order no.<br>Nº de Code |
|---|---|---|---|---|---|---|---|---|---|---|
| **d1** | **x2** | **x4** | **Spindel** | **T max** | **n max** | **i** | **Aussenkühlung** | **Innenkühlung** | **p** | **Bestellnummer** |
| 16 | 31,3 | 71 | WFB 20-12 | 6 | 12.000 | 1:1 | | | | MPU.T0.0210.DE10 |

| | |
|---|---|
| **Passend für Maschine:**<br>suitable machines:<br>approprié pour la machine: | DECO 10<br>EvoDECO 10/10<br>EvoDECO 10/8 |

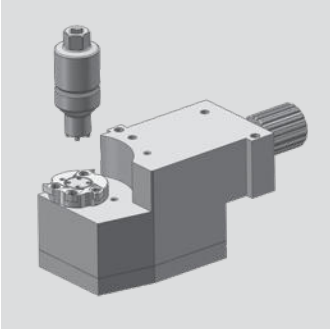

# Tornos - EvoDECO

**Radial-Bohr- und Fräskopf (Mehrkantschlagen)**
radial drilling and milling head (polyhedral beat)
Outil Rotatif Radial de Pertage et de Fraisage (battement polyedrique)

**WG 35**

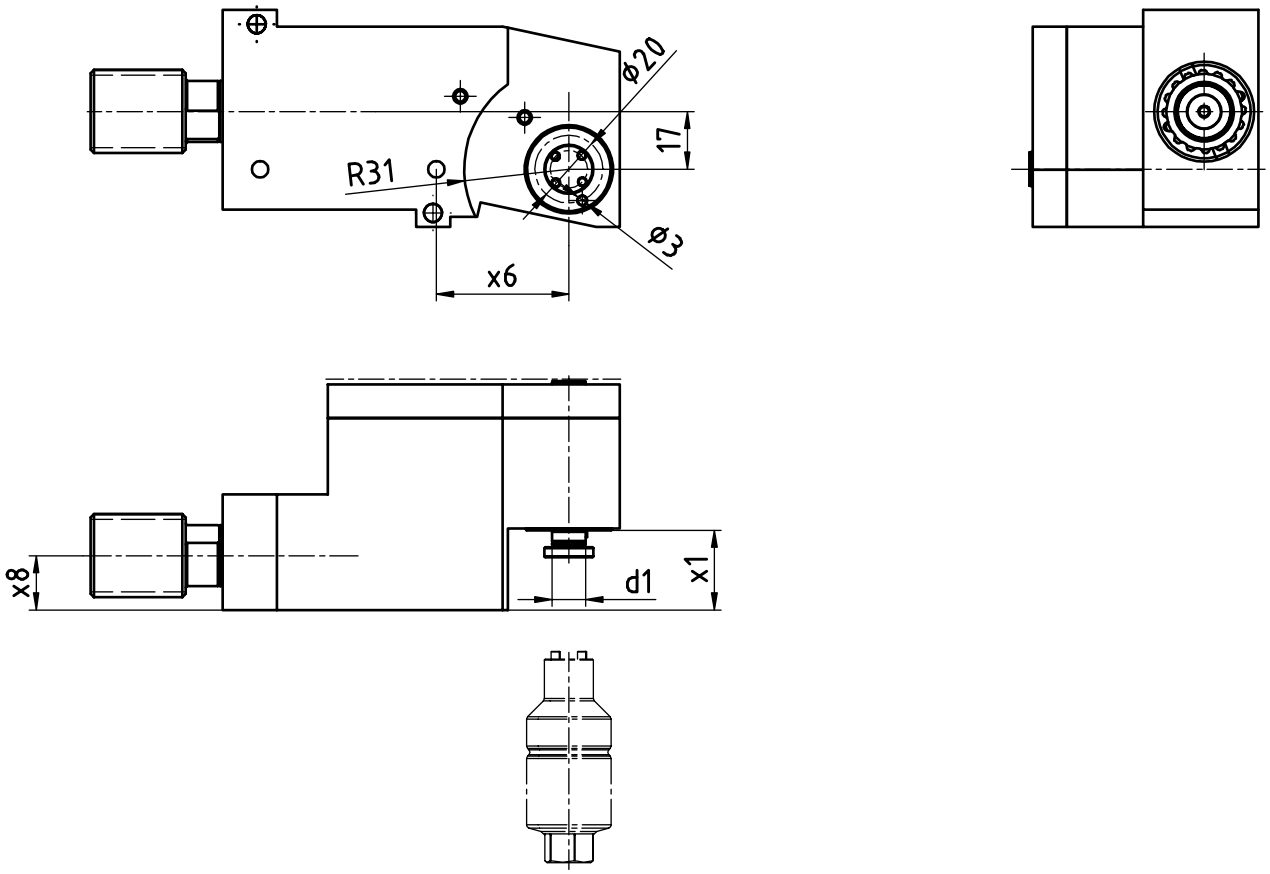


| [mm] | [mm] | [mm] | [mm] | Spindle<br>Broche | [Nm] | [rpm] | | Outside cooling<br>Lubrificat. ext. | Internal cooling<br>Lubrificat. cent. | [bar] | Order no.<br>Nº de Code |
|---|---|---|---|---|---|---|---|---|---|---|---|
| **d1** | **x1** | **x6** | **x8** | **Spindel** | **T max** | **n max** | **i** | **Aussenkühlung** | **Innenkühlung** | **p** | **Bestellnummer** |
| 10 | 23,5 | 39 | 16 | | 8 | 12.000 | 1:1,333 | | | | MPU.TO.0900.DE10 |

| | |
|---|---|
| **Passend für Maschine:**<br>suitable machines:<br>approprié pour la machine: | DECO 10<br>EvoDECO 10/10<br>EvoDECO 10/8 |

# Tornos - EvoDECO

**Bohr- und Fräskopf winkelverstellbar**
Drilling and milling swivel head
Outil de perçage et de fraisage tournant

**WG 35**

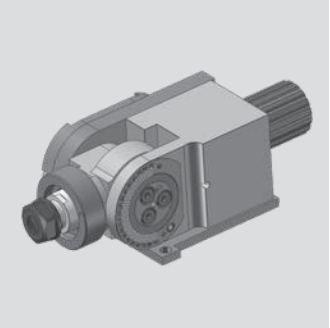

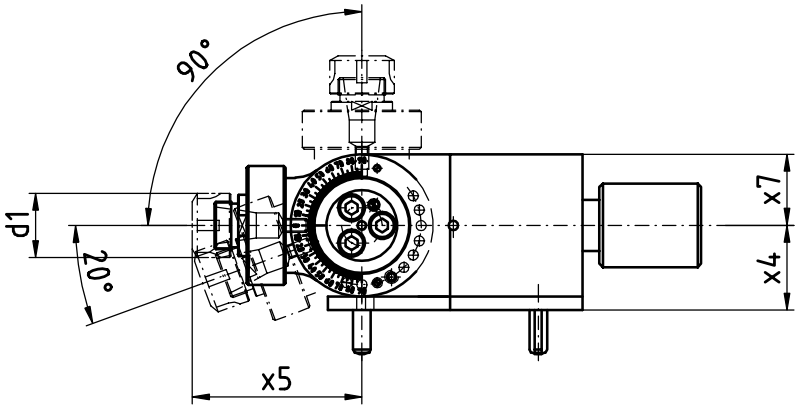


| [mm] | [mm] | [mm] | [mm] | Spindle<br>Broche | [Nm] | [rpm] | | Outside cooling<br>Lubrificat. ext. | Internal cooling<br>Lubrificat. cent. | [bar] | Order no.<br>Nº de Code |
|---|---|---|---|---|---|---|---|---|---|---|---|
| **d1** | **x4** | **x5** | **x7** | **Spindel** | **T max** | **n max** | **i** | **Aussenkühlung** | **Innenkühlung** | **p** | **Bestellnummer** |
| 19 | 25 | 50 | 21 | ER11 | 6 | 12.000 | 1:1 | | | | MPU.T0.0300.DE10 |

| | |
|---|---|
| **Passend für Maschine:**<br>suitable machines:<br>approprié pour la machine: | DECO 10<br>EvoDECO 10/10<br>EvoDECO 10/8 |

# Tornos - EvoDECO

**Bohr- und Fräskopf winkelverstellbar**
Drilling and milling swivel head
Outil de perçage et de fraisage tournant

**WG 35**

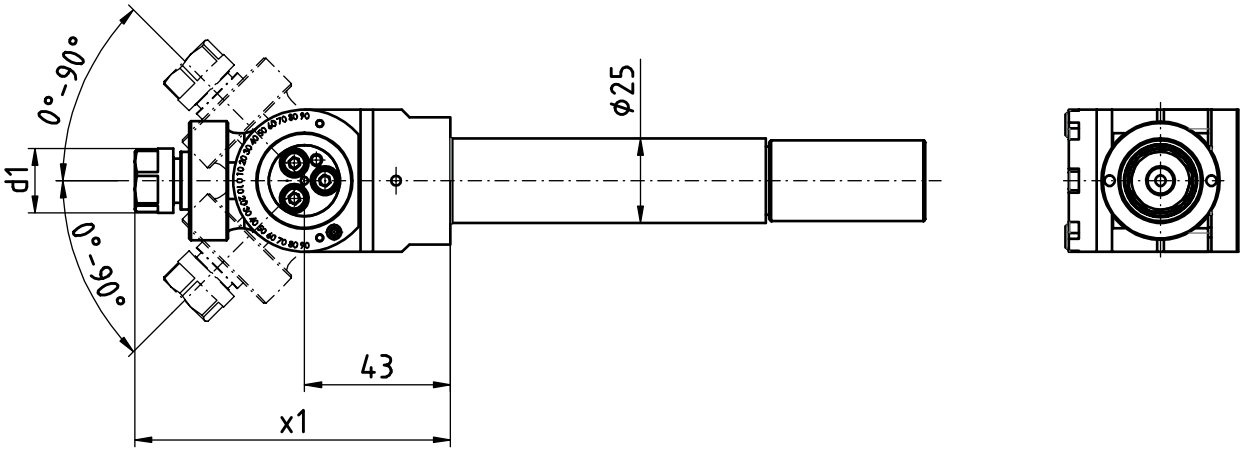


| [mm] | [mm] | Spindle<br>Broche | [Nm] | [rpm] | | Outside cooling<br>Lubrificat. ext. | Internal cooling<br>Lubrificat. cent. | [bar] | Order no.<br>Nº de Code |
|---|---|---|---|---|---|---|---|---|---|
| **d1** | **x1** | **Spindel** | **T max** | **n max** | **i** | **Aussenkühlung** | **Innenkühlung** | **p** | **Bestellnummer** |
| 19 | 93 | ER11 | 6 | 12.000 | 1:1 | | | | MPU.TO.0310.DE10 |

| | |
|---|---|
| **Passend für Maschine:**<br>suitable machines:<br>approprié pour la machine: | DECO 10<br>EvoDECO 10/10<br>EvoDECO 10/8 |

# Tornos - EvoDECO

**Gewindewirbelapparat**
Thread whirling unit
Unité de tourbillonnement

**WG 35**

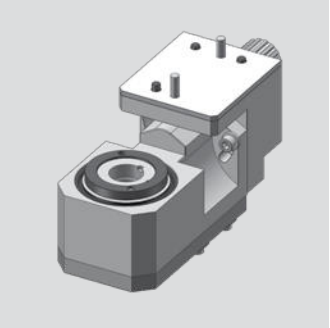

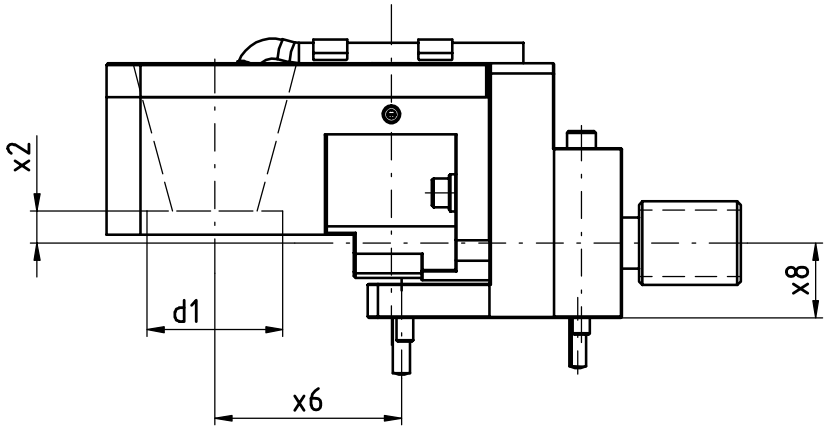


| [mm] | [mm] | [mm] | [mm] | Spindle<br>Broche | [Nm] | [rpm] | | Outside cooling<br>Lubrificat. ext. | Internal cooling<br>Lubrificat. cent. | [bar] | Order no.<br>Nº de Code |
|---|---|---|---|---|---|---|---|---|---|---|---|
| **d1** | **x2** | **x6** | **x8** | **Spindel** | **T max** | **n max** | **i** | **Aussenkühlung** | **Innenkühlung** | **p** | **Bestellnummer** |
| 40 | 9,5 | 55 | 22 | Tornos org. | 6 | 12.000 | 1:1 | x | | | MPU.T0.0800.DE10 |

| | |
|---|---|
| **Passend für Maschine:**<br>suitable machines:<br>approprié pour la machine: | DECO 10<br>EvoDECO 10/10<br>EvoDECO 10/8 |

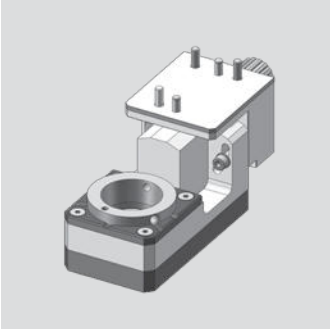

# Tornos - EvoDECO

**Gewindewirbelapparat modular**
**Thread whirling unit**
**Unité de tourbillonnement**

**WG 35**

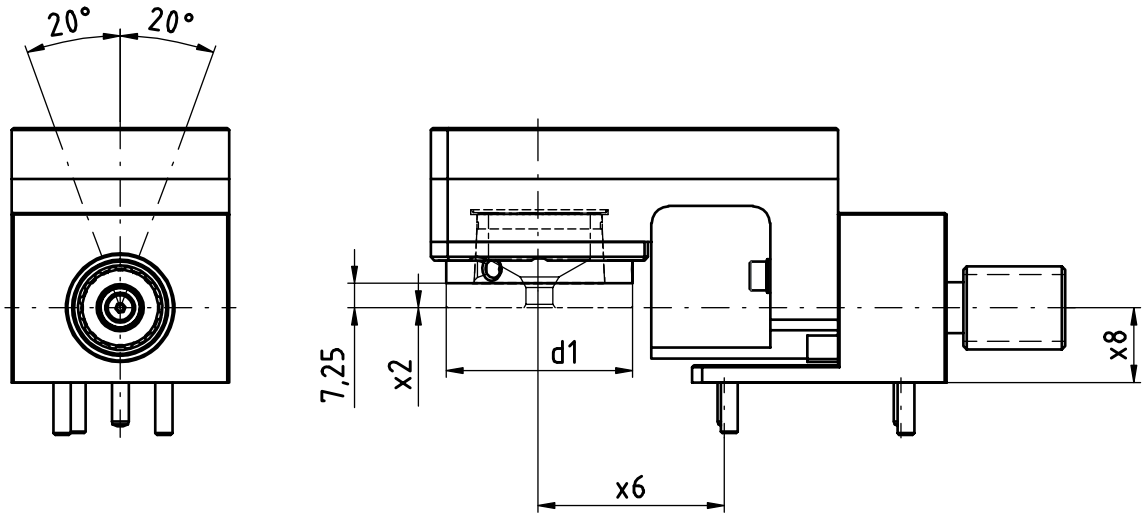


| [mm] | [mm] | [mm] | [mm] | Spindle<br>Broche | [Nm] | [rpm] | | Outside cooling<br>Lubrificat. ext. | Internal cooling<br>Lubrificat. cent. | [bar] | Order no.<br>Nº de Code |
|---|---|---|---|---|---|---|---|---|---|---|---|
| **d1** | **x2** | **x6** | **x8** | **Spindel** | **T max** | **n max** | **i** | **Aussenkühlung** | **Innenkühlung** | **p** | **Bestellnummer** |
| 54 | 0 | 55 | 22 | WFW 50 | 6 | 12.000 | 1:1 | x | | | MPU.TO.M0800.DE10 |

| | |
|---|---|
| **Passend für Maschine:**<br>suitable machines:<br>approprié pour la machine: | DECO 10<br>EvoDECO 10/10<br>EvoDECO 10/8 |

# Tornos - EvoDECO

**Axial Bohr- und Fräskopf**
Axial drilling and milling head
Outil de perçage et de fraisage axiale

**WG 35**

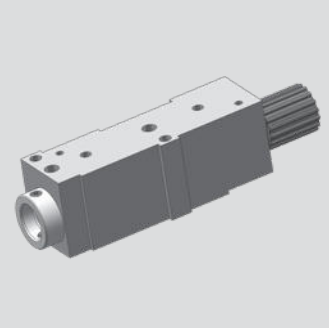

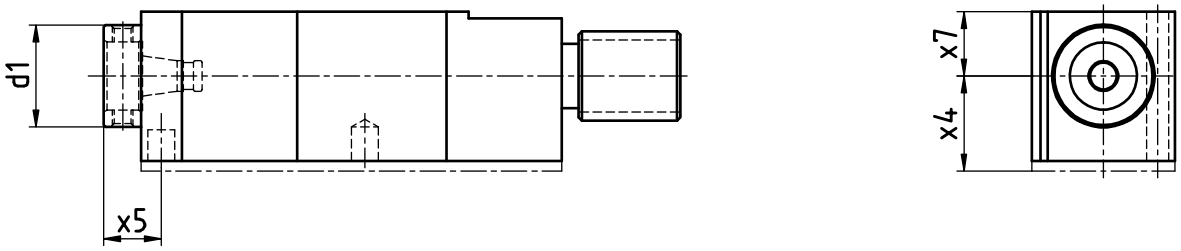


| [mm] | [mm] | [mm] | [mm] | Spindle<br>Broche | [Nm] | [rpm] | | Outside cooling<br>Lubrificat. ext. | Internal cooling<br>Lubrificat. cent. | [bar] | Order no.<br>Nº de Code |
|---|---|---|---|---|---|---|---|---|---|---|---|
| **d1** | **x4** | **x5** | **x7** | **Spindel** | **T max** | **n max** | **i** | **Aussenkühlung** | **Innenkühlung** | **p** | **Bestellnummer** |
| 30 | 28 | 7 | 19 | WFB 20-12 | 8 | 8.000 | 1:1 | | | | MPU.T0.0100.DE13 |
| 30 | 28 | 17 | 19 | WFB 20-12 | 8 | 8.000 | 1:1 | | | | MPU.T0.0110.DE13 |
| 30 | 28 | 33 | 19 | WFB 20-12 | 8 | 8.000 | 1:1 | | | | MPU.T0.0120.DE13 |
| 30 | 28 | 17 | 36 | WFB 20-12 | 3 | 24.000 | 1:3 | | | | MPU.T0.0130.DE13 |
| 30 | 28 | 7 | 36 | WFB 20-12 | 3 | 24.000 | 1:3 | | x | 80 | MPU.T0.0100.DE13H |
| 30 | 28 | 17 | 36 | WFB 20-12 | 3 | 24.000 | 1:3 | | x | 80 | MPU.T0.0110.DE13H |
| 30 | 28 | 33 | 36 | WFB 20-12 | 3 | 24.000 | 1:3 | | x | 80 | MPU.T0.0120.DE13H |
| 30 | 28 | 7 | 36 | WFB 20-12 | 8 | 8.000 | 1:1 | | x | 80 | MPU.T0.0100.DE13H1 |
| 30 | 28 | 33 | 36 | WFB 20-12 | 8 | 8.000 | 1:1 | | x | 80 | MPU.T0.0120.DE13H1 |

| | | |
|---|---|---|
| **Passend für Maschine:**<br>suitable machines:<br>approprié pour la machine: | DECO 13<br>DECO 16 | EvoDECO 16/10<br>EvoDECO 16/8 |

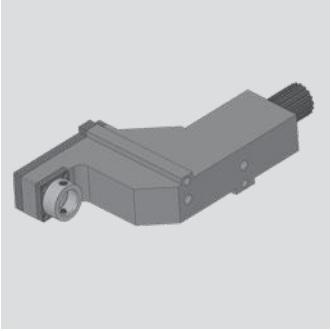

# Tornos - EvoDECO

**Radial Bohr- und Fräskopf**
Radial drilling and milling head
Outil de perçage et de fraisage radiale

**WG 35**

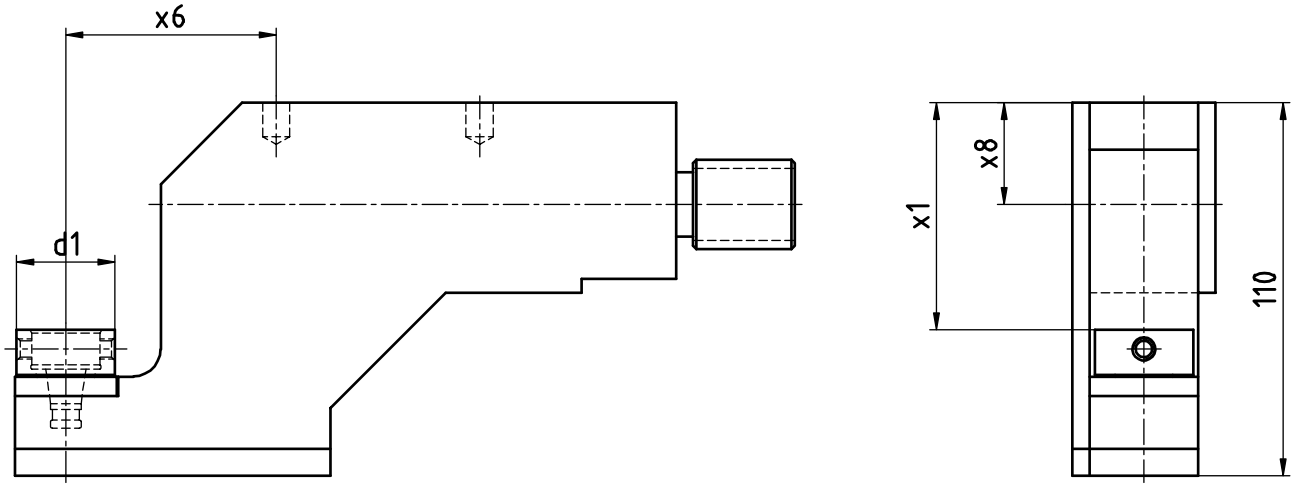


| [mm] | [mm] | [mm] | [mm] | Spindle<br>Broche | [Nm] | [rpm] | | Outside cooling<br>Lubrificat. ext. | Internal cooling<br>Lubrificat. cent. | [bar] | Order no.<br>Nº de Code |
|---|---|---|---|---|---|---|---|---|---|---|---|
| **d1** | **x1** | **x6** | **x8** | **Spindel** | **T max** | **n max** | **i** | **Aussenkühlung** | **Innenkühlung** | **p** | **Bestellnummer** |
| 30 | 67 | 62 | 30 | WFB 20-12 | 8 | 8.000 | 1:1 | | | | MPU.TO.0200.DE13 |

| **Passend für Maschine:**<br>suitable machines:<br>approprié pour la machine: | DECO 13<br>DECO 16 | EvoDECO 16/10<br>EvoDECO 16/8 |
|---|---|---|

# Tornos - EvoDECO

**Axial Bohr- und Fräskopf**
Axial drilling and milling head
Outil de perçage et de fraisage axiale

**WG 35**

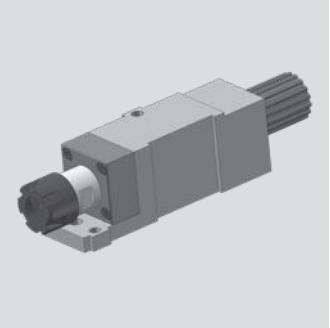

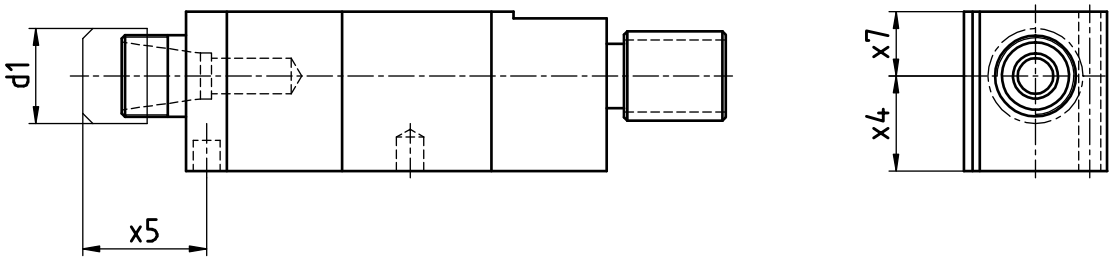


| [mm] | [mm] | [mm] | [mm] | Spindle<br>Broche | [Nm] | [rpm] | | Outside cooling<br>Lubrificat. ext. | Internal cooling<br>Lubrificat. cent. | [bar] | Order no.<br>Nº de Code |
|---|---|---|---|---|---|---|---|---|---|---|---|
| **d1** | **x4** | **x5** | **x7** | **Spindel** | **T max** | **n max** | **i** | **Aussenkühlung** | **Innenkühlung** | **p** | **Bestellnummer** |
| 28 | 28 | 26,5 | 19 | ER20 MINI | 8 | 8.000 | 1:1 | | | | MPU.TO.0100.DE13.ER20M |
| 28 | 28 | 36,5 | 19 | ER20 MINI | 8 | 8.000 | 1:1 | | | | MPU.TO.0110.DE13.ER20M |
| 28 | 28 | 71,5 | 19 | ER20 MINI | 8 | 8.000 | 1:1 | | | | MPU.TO.0120.DE13.ER20M |

| | | |
|---|---|---|
| **Passend für Maschine:**<br>suitable machines:<br>approprié pour la machine: | DECO 13<br>DECO 16 | EvoDECO 16/10<br>EvoDECO 16/8 |

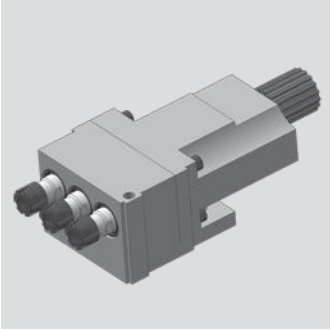

# Tornos - EvoDECO

**Axial Bohr- und Fräskopf**
Axial drilling and milling head
Outil de perçage et de fraisage axiale

**WG 35**

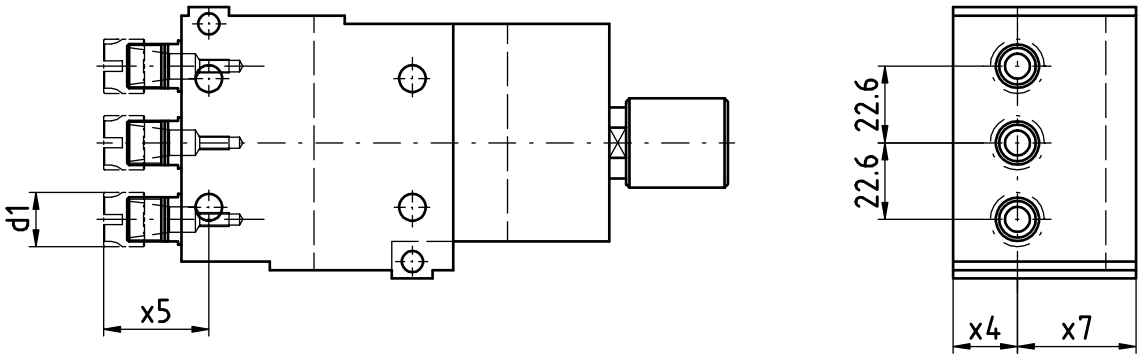


| [mm] | [mm] | [mm] | [mm] | Spindle<br>Broche | [Nm] | [rpm] | | Outside cooling<br>Lubrificat. ext. | Internal cooling<br>Lubrificat. cent. | [bar] | Order no.<br>Nº de Code |
|---|---|---|---|---|---|---|---|---|---|---|---|
| **d1** | **x4** | **x5** | **x7** | **Spindel** | **T max** | **n max** | **i** | **Aussenkühlung** | **Innenkühlung** | **p** | **Bestellnummer** |
| 16 | 19 | 31 | 35 | ER11 MINI | 8 | 8.000 | 1:1 | | | | MPU.TO.1103.DE13 |

| | | |
|---|---|---|
| **Passend für Maschine:**<br>suitable machines:<br>approprié pour la machine: | DECO 13<br>DECO 16 | EvoDECO 16/10<br>EvoDECO 16/8 |

# Tornos - EvoDECO

**Radial Bohr- und Fräskopf**
Radial drilling and milling head
Outil de perçage et de fraisage radiale

**WG 35**

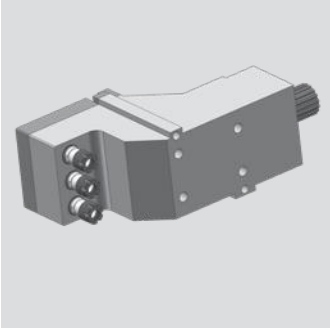

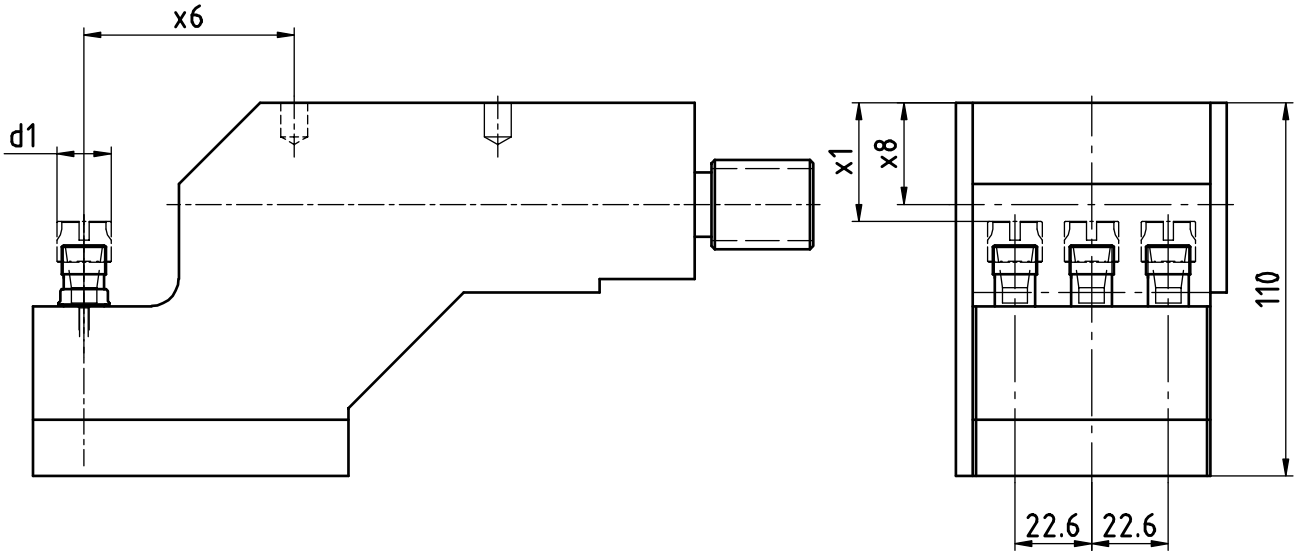


| [mm] | [mm] | [mm] | [mm] | Spindle<br>Broche | [Nm] | [rpm] | | Outside cooling<br>Lubrificat. ext. | Internal cooling<br>Lubrificat. cent. | [bar] | Order no.<br>Nº de Code |
|---|---|---|---|---|---|---|---|---|---|---|---|
| **d1** | **x1** | **x6** | **x8** | **Spindel** | **T max** | **n max** | **i** | **Aussenkühlung** | **Innenkühlung** | **p** | **Bestellnummer** |
| 16 | 35 | 62 | 80 | ER11 MINI | 8 | 8.000 | 1:1 | | | | MPU.T0.2103.DE13 |

| | | |
|---|---|---|
| **Passend für Maschine:**<br>suitable machines:<br>approprié pour la machine: | DECO 13<br>DECO 16 | EvoDECO 16/10<br>EvoDECO 16/8 |

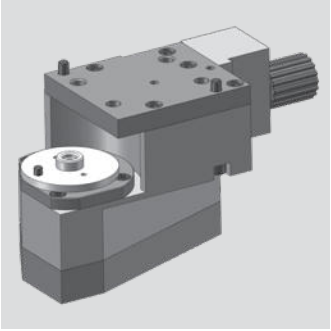

# Tornos - EvoDECO

**Radial-Bohr- und Fräskopf (Mehrkantschlagen)**
radial drilling and milling head (polyhedral beat)
Outil Rotatif Radial de Pertage et de Fraisage (battement polyedrique)

**WG 35**

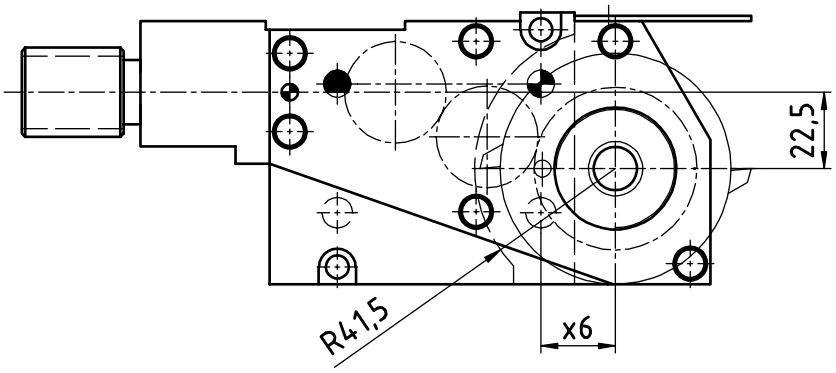


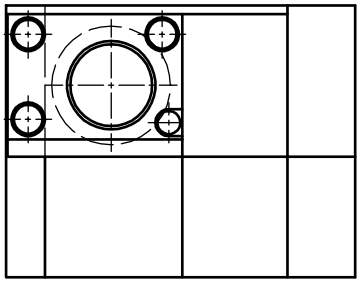

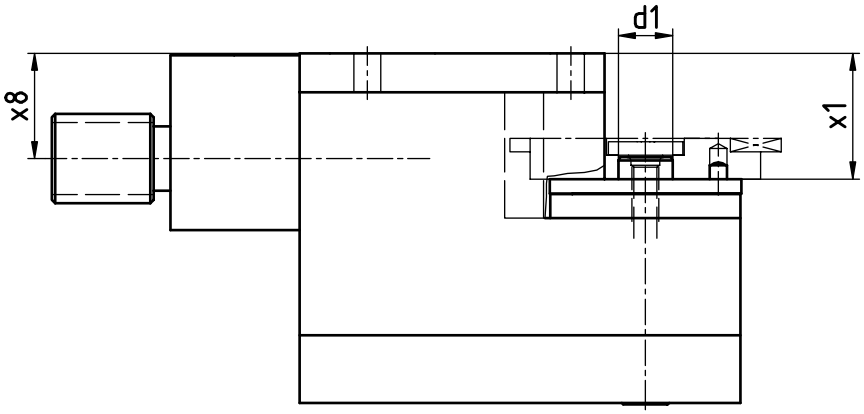


| [mm] | [mm] | [mm] | [mm] | Spindle<br>Broche | [Nm] | [rpm] | | Outside cooling<br>Lubrificat. ext. | Internal cooling<br>Lubrificat. cent. | [bar] | Order no.<br>Nº de Code |
|---|---|---|---|---|---|---|---|---|---|---|---|
| **d1** | **x1** | **x6** | **x8** | **Spindel** | **T max** | **n max** | **i** | **Aussenkühlung** | **Innenkühlung** | **p** | **Bestellnummer** |
| 16 | 37 | 22 | 31 | | 16 | 5.000 | 1,6:1 | | | | MPU.TO.0900.DE13 |

| | | |
|---|---|---|
| **Passend für Maschine:**<br>suitable machines:<br>approprié pour la machine: | DECO 13<br>DECO 16 | EvoDECO 16/10<br>EvoDECO 16/8 |

# Tornos - EvoDECO

**Bohr- und Fräskopf winkelverstellbar**
Drilling and milling swivel head
Outil de perçage et de fraisage tournant

**WG 35**

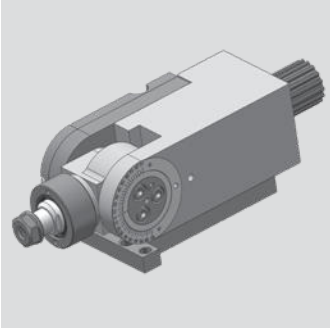

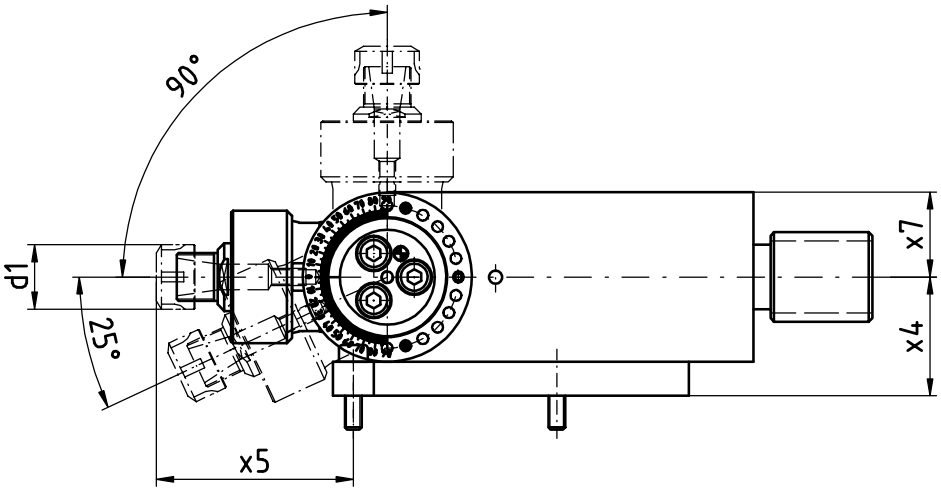


| [mm] | [mm] | [mm] | [mm] | Spindle<br>Broche | [Nm] | [rpm] | | Outside cooling<br>Lubrificat. ext. | Internal cooling<br>Lubrificat. cent. | [bar] | Order no.<br>Nº de Code |
|---|---|---|---|---|---|---|---|---|---|---|---|
| **d1** | **x4** | **x5** | **x7** | **Spindel** | **T max** | **n max** | **i** | **Aussenkühlung** | **Innenkühlung** | **p** | **Bestellnummer** |
| 19 | 35 | 58 | 25 | ER11 | 8 | 8.000 | 1:1 | | | | MPU.T0.0300.DE13 |

| | | |
|---|---|---|
| **Passend für Maschine:**<br>suitable machines:<br>approprié pour la machine: | DECO 13<br>DECO 16 | EvoDECO 16/10<br>EvoDECO 16/8 |

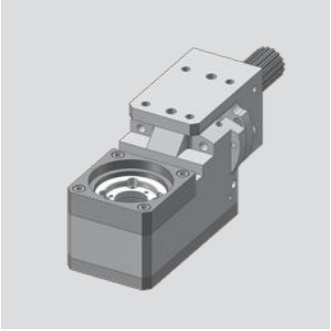

# Tornos - EvoDECO

**Gewindewirbelapparat**
Thread whirling unit
Unité de tourbillonnement

**WG 35**

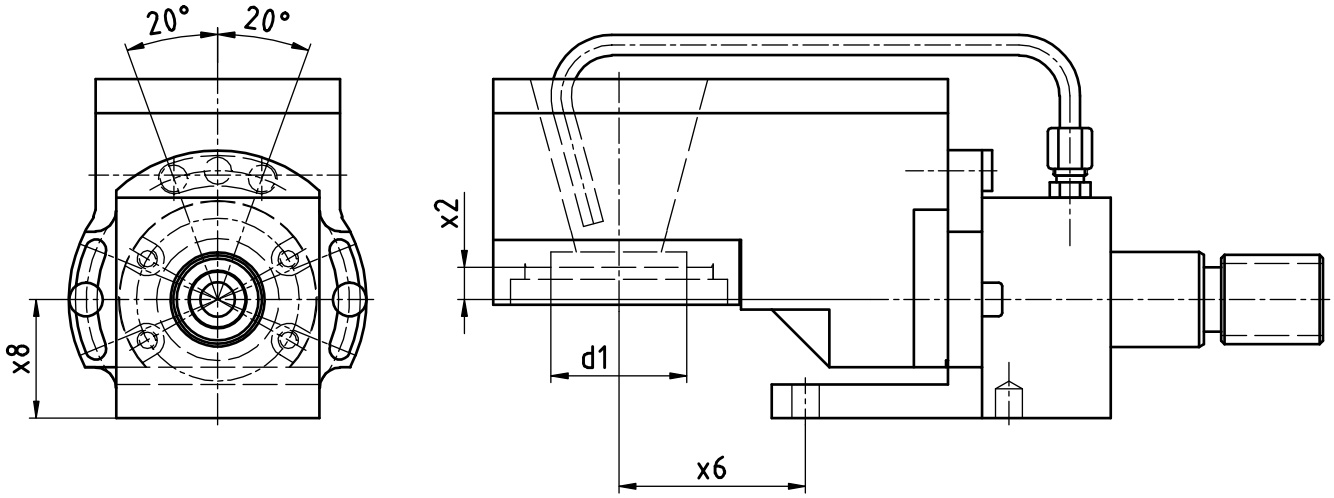


| [mm] | [mm] | [mm] | [mm] | Spindle<br>Broche | [Nm] | [rpm] | | Outside cooling<br>Lubrificat. ext. | Internal cooling<br>Lubrificat. cent. | [bar] | Order no.<br>Nº de Code |
|---|---|---|---|---|---|---|---|---|---|---|---|
| **d1** | **x2** | **x6** | **x8** | **Spindel** | **T max** | **n max** | **i** | **Aussenkühlung** | **Innenkühlung** | **p** | **Bestellnummer** |
| 40 | 9,5 | 55 | 35 | Tornos org. | 16 | 8.000 | 1:1 | x | | | MPU.TO.0800.DE13 |

| | | |
|---|---|---|
| **Passend für Maschine:**<br>suitable machines:<br>approprié pour la machine: | DECO 13<br>DECO 16 | EvoDECO 16/10<br>EvoDECO 16/8 |

# Tornos - EvoDECO

**Gewindewirbelapparat modular**
Thread whirling unit
Unité de tourbillonnement

**WG 35**

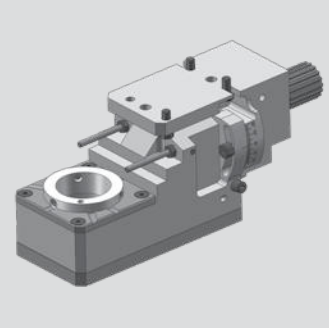

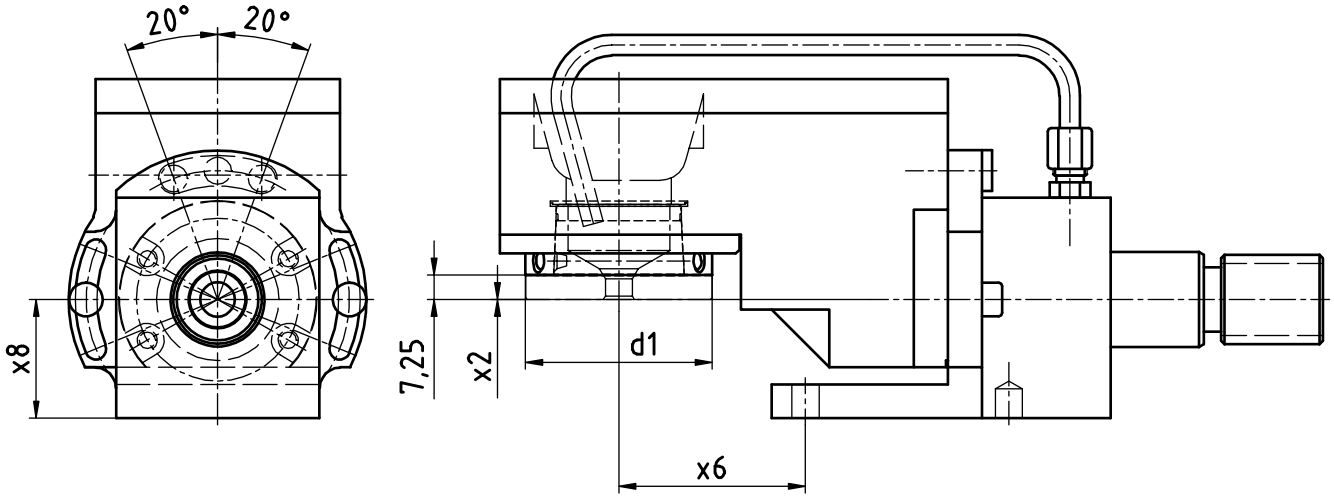


| [mm] | [mm] | [mm] | [mm] | Spindle<br>Broche | [Nm] | [rpm] | | Outside cooling<br>Lubrificat. ext. | Internal cooling<br>Lubrificat. cent. | [bar] | Order no.<br>Nº de Code |
|---|---|---|---|---|---|---|---|---|---|---|---|
| **d1** | **x2** | **x6** | **x8** | **Spindel** | **T max** | **n max** | **i** | **Aussenkühlung** | **Innenkühlung** | **p** | **Bestellnummer** |
| 54 | 0 | 55 | 35 | WFW 50 | 16 | 8.000 | 1:1 | x | | | MPU.TO.M0800.DE13 |

| | | |
|---|---|---|
| **Passend für Maschine:**<br>suitable machines:<br>approprié pour la machine: | DECO 13<br>DECO 16 | EvoDECO 16/10<br>EvoDECO 16/8 |

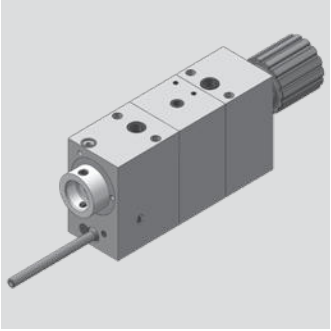

# Tornos - EvoDECO

**Axial Bohr- und Fräskopf**
Axial drilling and milling head
Outil de perçage et de fraisage axiale

**WG 35**

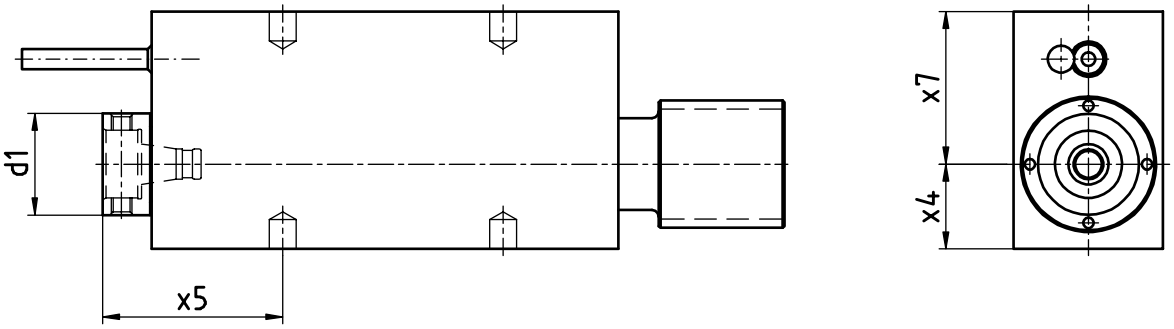


| [mm] | [mm] | [mm] | [mm] | Spindle<br>Broche | [Nm] | [rpm] | | Outside cooling<br>Lubrificat. ext. | Internal cooling<br>Lubrificat. cent. | [bar] | Order no.<br>Nº de Code |
|---|---|---|---|---|---|---|---|---|---|---|---|
| **d1** | **x4** | **x5** | **x7** | **Spindel** | **T max** | **n max** | **i** | **Aussenkühlung** | **Innenkühlung** | **p** | **Bestellnummer** |
| 30 | 25 | 53 | 45 | WFB 20-12 | 16 | 8.000 | 1:1 | x | | | MPU.T0.0100.DE20-H25 |
| 30 | 25 | 53 | 45 | WFB 20-12 | 16 | 8.000 | 1:1 | x | x | 170 | MPU.T0.0100.DE20H1 |
| 30 | 25 | 53 | 45 | WFB 20-12 | 8 | 14.544 | 1:1,818 | x | x | 170 | MPU.T0.0100.DE20H2 |
| 30 | 27 | 53 | 43 | WFB 20-12 | 16 | 8.000 | 1:1 | x | | | MPU.T0.0100.DE20-H27 |
| 30 | 25 | 80 | 45 | WFB 20-12 | 16 | 8.000 | 1:1 | x | | | MPU.T0.0110.DE20 |
| 30 | 25 | 80 | 45 | WFB 20-12 | 16 | 8.000 | 1:1 | x | x | 170 | MPU.T0.0110.DE20H1 |
| 30 | 25 | 80 | 45 | WFB 20-12 | 8 | 14.544 | 1:1,818 | x | x | 170 | MPU.T0.0110.DE20H2 |
| 30 | 25 | 114 | 45 | WFB 20-12 | 16 | 8.000 | 1:1 | x | | | MPU.T0.0120.DE20 |
| 30 | 25 | 114 | 45 | WFB 20-12 | 8 | 14.544 | 1:1,818 | x | x | 170 | MPU.T0.0120.DE20H2 |

| | | |
|---|---|---|
| **Passend für Maschine:**<br>suitable machines:<br>approprié pour la machine: | DECO 20<br>DECO 26 | EvoDECO 20<br>EvoDECO 32 |

# Tornos - EvoDECO

**Radial Bohr- und Fräskopf**
Radial drilling and milling head
Outil de perçage et de fraisage radiale

**WG 35**

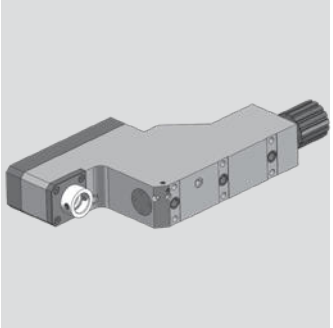

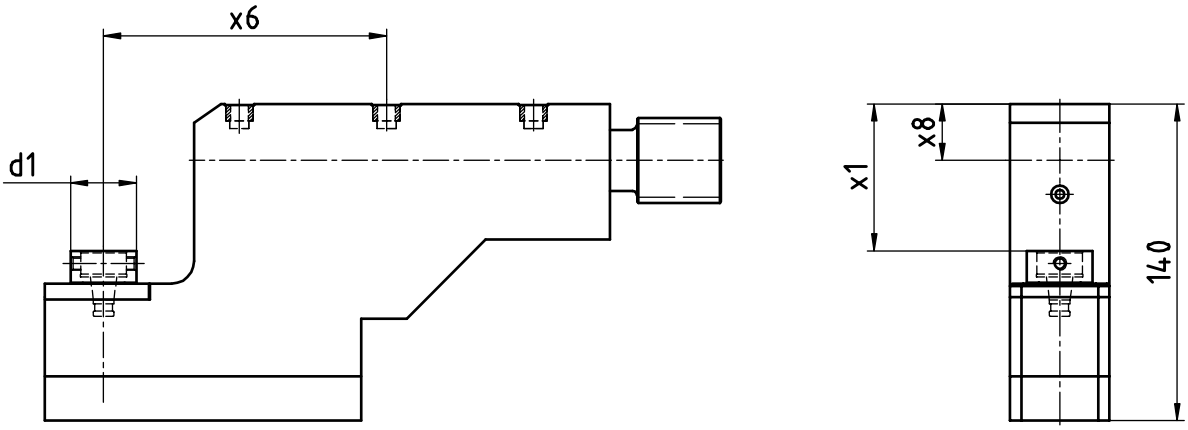


| [mm] | [mm] | [mm] | [mm] | Spindle<br>Broche | [Nm] | [rpm] | | Outside cooling<br>Lubrificat. ext. | Internal cooling<br>Lubrificat. cent. | [bar] | Order no.<br>Nº de Code |
|---|---|---|---|---|---|---|---|---|---|---|---|
| **d1** | **x1** | **x6** | **x8** | **Spindel** | **T max** | **n max** | **i** | **Aussenkühlung** | **Innenkühlung** | **p** | **Bestellnummer** |
| 30 | 65 | 125 | 25 | WFB 20-12 | 8 | 8.000 | 1:1 | x | | | MPU.T0.0200.DE20 |

| | | |
|---|---|---|
| **Passend für Maschine:**<br>suitable machines:<br>approprié pour la machine: | DECO 20<br>DECO 26 | EvoDECO 20<br>EvoDECO 32 |

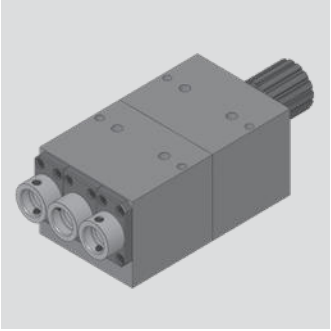

# Tornos - EvoDECO

**Axial Bohr- und Fräskopf**
Axial drilling and milling head
Outil de perçage et de fraisage axiale

**WG 35**

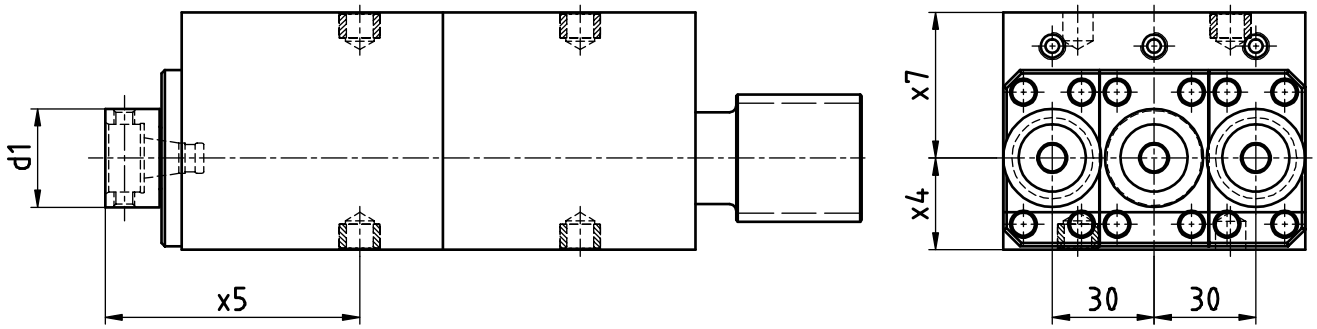


| [mm] | [mm] | [mm] | [mm] | Spindle<br>Broche | [Nm] | [rpm] | | Outside cooling<br>Lubrificat. ext. | Internal cooling<br>Lubrificat. cent. | [bar] | Order no.<br>Nº de Code |
|---|---|---|---|---|---|---|---|---|---|---|---|
| **d1** | **x4** | **x5** | **x7** | **Spindel** | **T max** | **n max** | **i** | **Aussenkühlung** | **Innenkühlung** | **p** | **Bestellnummer** |
| 30 | 23 | 75 | 47 | WFB 20-12 | 8 | 8.000 | 1:1 | x | | | MPU.TO.1103.DE20 |

| | | |
|---|---|---|
| **Passend für Maschine:**<br>suitable machines:<br>approprié pour la machine: | DECO 20<br>DECO 26 | EvoDECO 20<br>EvoDECO 32 |

# Tornos - EvoDECO

**Radial Bohr- und Fräskopf**
Radial drilling and milling head
Outil de perçage et de fraisage radiale

**WG 35**

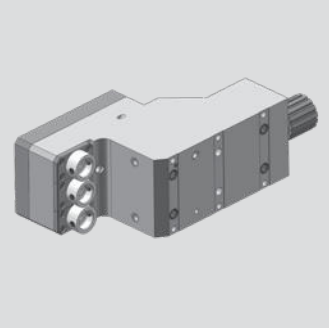

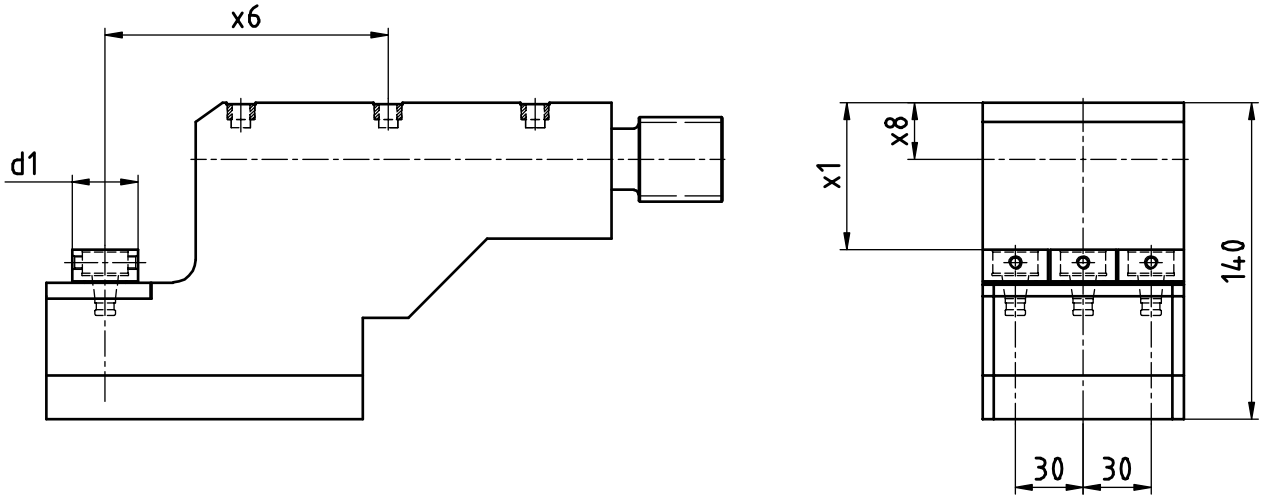


| [mm] | [mm] | [mm] | [mm] | Spindle<br>Broche | [Nm] | [rpm] | | Outside cooling<br>Lubrificat. ext. | Internal cooling<br>Lubrificat. cent. | [bar] | Order no.<br>Nº de Code |
|---|---|---|---|---|---|---|---|---|---|---|---|
| **d1** | **x1** | **x6** | **x8** | **Spindel** | **T max** | **n max** | **i** | **Aussenkühlung** | **Innenkühlung** | **p** | **Bestellnummer** |
| 29 | 23 | 125 | 25 | WFB 20-12 | 8 | 8.000 | 1:1 | x | | | MPU.T0.2103.DE20 |

| | | |
|---|---|---|
| **Passend für Maschine:**<br>suitable machines:<br>approprié pour la machine: | DECO 20<br>DECO 26 | EvoDECO 20<br>EvoDECO 32 |

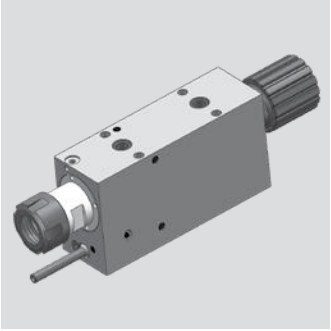

# Tornos - EvoDECO

**Axial Bohr- und Fräskopf**
Axial drilling and milling head
Outil de perçage et de fraisage axiale

**WG 35**

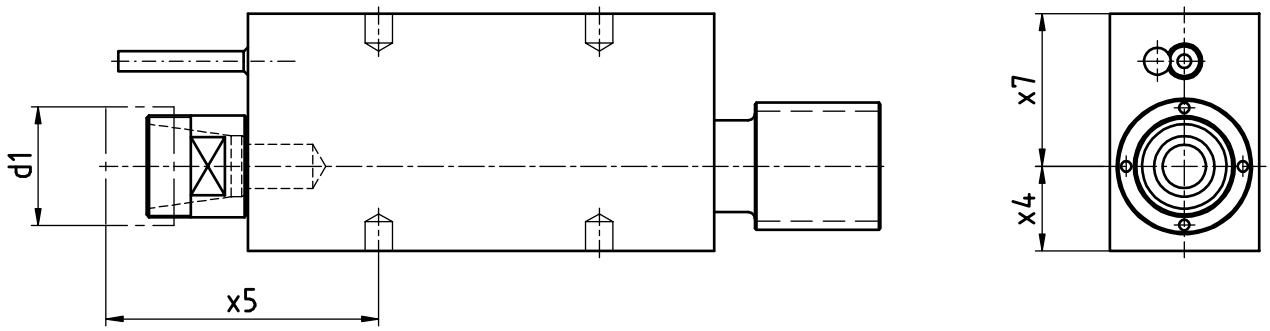


| [mm] | [mm] | [mm] | [mm] | Spindle<br>Broche | [Nm] | [rpm] | | Outside cooling<br>Lubrificat. ext. | Internal cooling<br>Lubrificat. cent. | [bar] | Order no.<br>Nº de Code |
|---|---|---|---|---|---|---|---|---|---|---|---|
| **d1** | **x4** | **x5** | **x7** | **Spindel** | **T max** | **n max** | **i** | **Aussenkühlung** | **Innenkühlung** | **p** | **Bestellnummer** |
| 35 | 25 | 80 | 45 | ER25 MINI | 16 | 8.000 | 1:1 | x | | | MPU.TO.0100.DE20.ER25M |
| 35 | 25 | 110 | 45 | ER25 MINI | 16 | 8.000 | 1:1 | x | | | MPU.TO.0110.DE20.ER25M |
| 35 | 25 | 145 | 45 | ER25 MINI | 16 | 8.000 | 1:1 | x | | | MPU.TO.0120.DE20.ER25M |

| | | |
|---|---|---|
| **Passend für Maschine:**<br>suitable machines:<br>approprié pour la machine: | DECO 20<br>DECO 26 | EvoDECO 20<br>EvoDECO 32 |

# Tornos - EvoDECO

**Radial Bohr- und Fräskopf**
Radial drilling and milling head
Outil de perçage et de fraisage radiale

**WG 35**

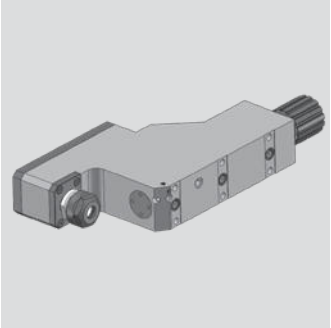

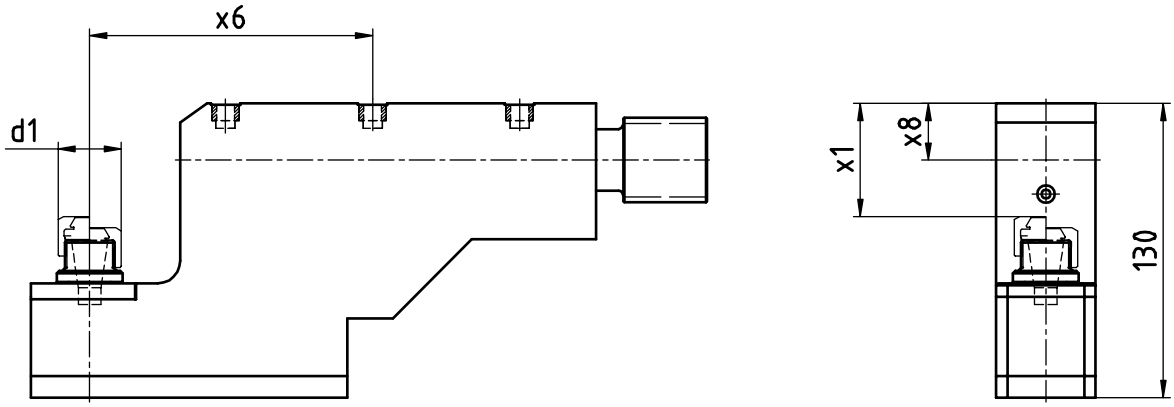


| [mm] | [mm] | [mm] | [mm] | Spindle<br>Broche | [Nm] | [rpm] | | Outside cooling<br>Lubrificat. ext. | Internal cooling<br>Lubrificat. cent. | [bar] | Order no.<br>Nº de Code |
|---|---|---|---|---|---|---|---|---|---|---|---|
| **d1** | **x1** | **x6** | **x8** | **Spindel** | **T max** | **n max** | **i** | **Aussenkühlung** | **Innenkühlung** | **p** | **Bestellnummer** |
| 28 | 50 | 125 | 25 | ER16 | 8 | 8.000 | 1:1 | x | | | MPU.T0.0210.DE20 |

| | | |
|---|---|---|
| **Passend für Maschine:**<br>suitable machines:<br>approprié pour la machine: | DECO 20<br>DECO 26 | EvoDECO 20<br>EvoDECO 32 |

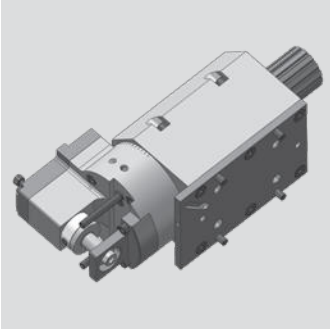

# Tornos - EvoDECO

**Radial-Bohr- und Fräskopf (Mehrkantschlagen)**
radial drilling and milling head (polyhedral beat)
Outil Rotatif Radial de Pertage et de Fraisage (battement polyedrique)

**WG 35**

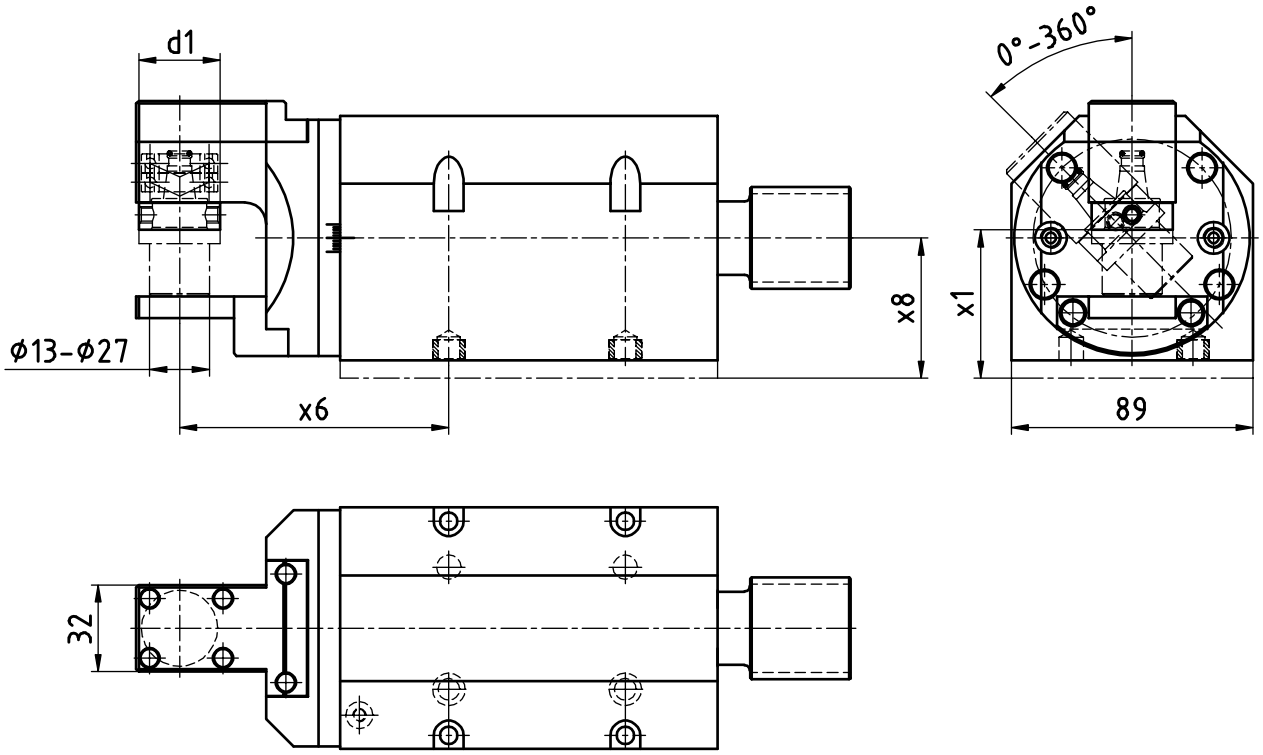


| [mm] | [mm] | [mm] | [mm] | Spindle<br>Broche | [Nm] | [rpm] | | Outside cooling<br>Lubrificat. ext. | Internal cooling<br>Lubrificat. cent. | [bar] | Order no.<br>Nº de Code |
|---|---|---|---|---|---|---|---|---|---|---|---|
| **d1** | **x1** | **x6** | **x8** | **Spindel** | **T max** | **n max** | **i** | **Aussenkühlung** | **Innenkühlung** | **p** | **Bestellnummer** |
| 30 | 54,7 | 99,25 | 51,7 | WFB 20-12 | 16 | 8.000 | 1:1 | x | | | MPU.TO.0900.DE20 |

| **Passend für Maschine:**<br>suitable machines:<br>approprié pour la machine: | DECO 20<br>DECO 26 | EvoDECO 20<br>EvoDECO 32 |
|---|---|---|

**Achtung! Einsetzbar als schwenbarer Winkelkopf**
attention! Useable as angle toolholder adjustable
attention! applicable en tant que tête d angle pivotante

# Tornos - EvoDECO

**Bohr- und Fräskopf winkelverstellbar**
Drilling and milling swivel head
Outil de perçage et de fraisage tournant

**WG 35**

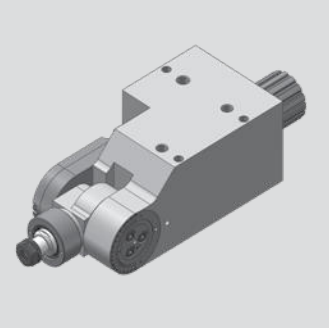

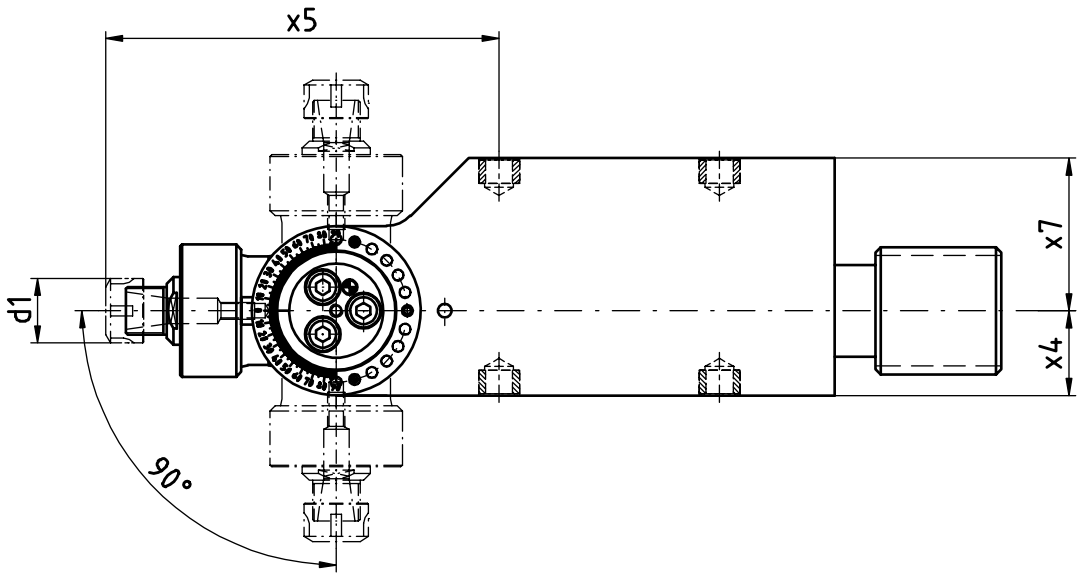


| [mm] | [mm] | [mm] | [mm] | Spindle<br>Broche | [Nm] | [rpm] | | Outside cooling<br>Lubrificat. ext. | Internal cooling<br>Lubrificat. cent. | [bar] | Order no.<br>Nº de Code |
|---|---|---|---|---|---|---|---|---|---|---|---|
| **d1** | **x4** | **x5** | **x7** | **Spindel** | **T max** | **n max** | **i** | **Aussenkühlung** | **Innenkühlung** | **p** | **Bestellnummer** |
| 19 | 25 | 116 | 45 | ER11 | 8 | 8.000 | 1:1 | | | | MPU.TO.0300.DE20 |
| 19 | 25 | 148 | 45 | ER11 | 8 | 8.000 | 1:1 | | | | MPU.TO.0310.DE20 |

| | | |
|---|---|---|
| **Passend für Maschine:**<br>suitable machines:<br>approprié pour la machine: | DECO 20<br>DECO 26 | EvoDECO 20<br>EvoDECO 32 |

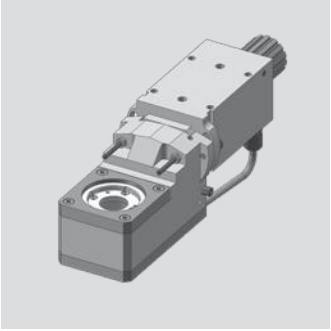

# Tornos - EvoDECO

**Gewindewirbelapparat**
Thread whirling unit
Unité de tourbillonnement

**WG 35**

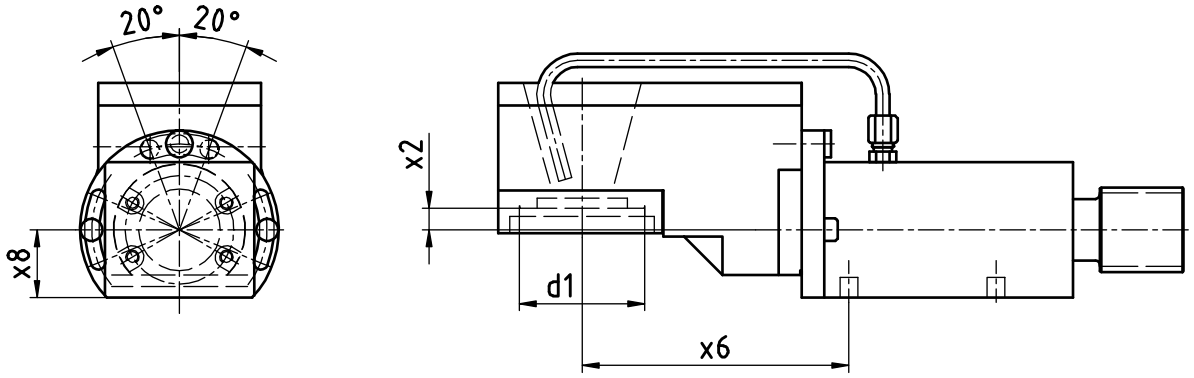


| [mm] | [mm] | [mm] | [mm] | Spindle<br>Broche | [Nm] | [rpm] | | Outside cooling<br>Lubrificat. ext. | Internal cooling<br>Lubrificat. cent. | [bar] | Order no.<br>Nº de Code |
|---|---|---|---|---|---|---|---|---|---|---|---|
| **d1** | **x2** | **x6** | **x8** | **Spindel** | **T max** | **n max** | **i** | **Aussenkühlung** | **Innenkühlung** | **p** | **Bestellnummer** |
| 40 | 9,5 | 118 | 35 | Tornos org. | 16 | 8.000 | 1:1 | x | | | MPU.TO.0800.DE20 |

| | | |
|---|---|---|
| **Passend für Maschine:**<br>suitable machines:<br>approprié pour la machine: | DECO 20<br>DECO 26 | EvoDECO 20<br>EvoDECO 32 |

# Tornos - EvoDECO

**Gewindewirbelapparat modular**
Thread whirling unit
Unité de tourbillonnement

**WG 35**

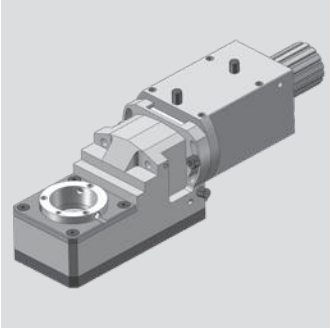

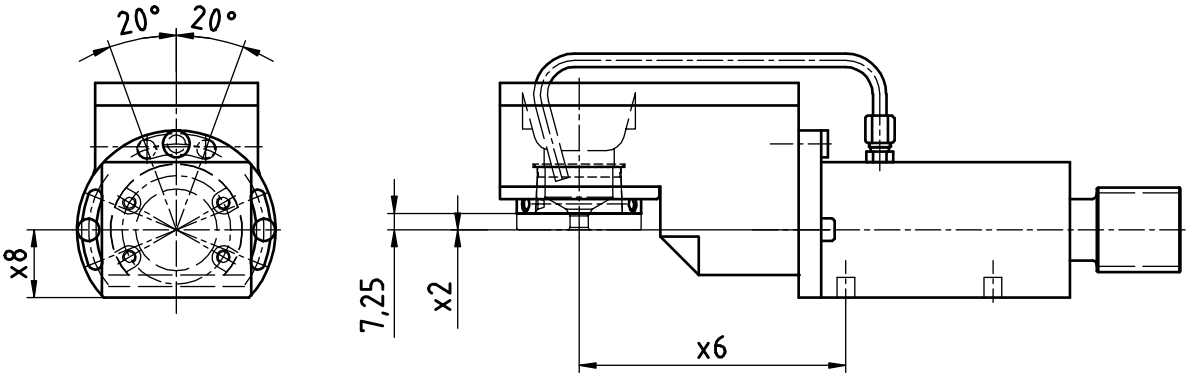


| [mm] | [mm] | [mm] | [mm] | Spindle<br>Broche | [Nm] | [rpm] | | Outside cooling<br>Lubrificat. ext. | Internal cooling<br>Lubrificat. cent. | [bar] | Order no.<br>Nº de Code |
|---|---|---|---|---|---|---|---|---|---|---|---|
| **d1** | **x2** | **x6** | **x8** | **Spindel** | **T max** | **n max** | **i** | **Aussenkühlung** | **Innenkühlung** | **p** | **Bestellnummer** |
| 54 | 0 | 118 | 30 | WFW 50 | 16 | 8.000 | 1:1 | x | | | MPU.TO.M0800.DE20 |

| | | |
|---|---|---|
| **Passend für Maschine:**<br>suitable machines:<br>approprié pour la machine: | DECO 20<br>DECO 26 | EvoDECO 20<br>EvoDECO 32 |

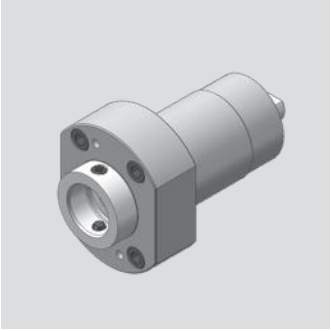

# Tornos - Gamma

**Axial Bohr- und Fräskopf**
Axial drilling and milling head
Outil de perçage et de fraisage axiale

**WG 35**

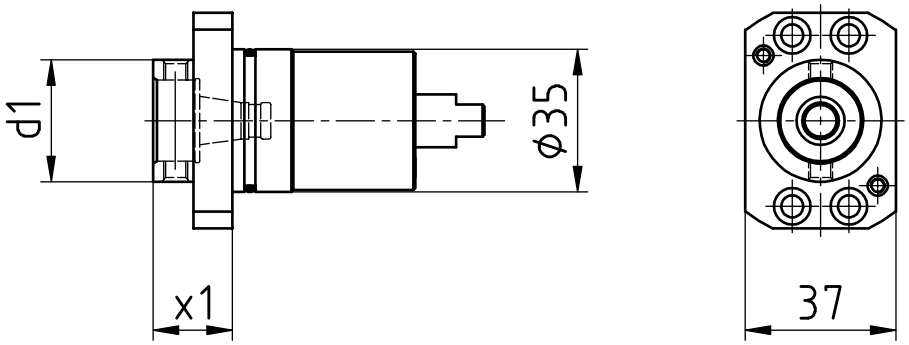


| [mm] | [mm] | Spindle<br>Broche | [Nm] | [rpm] | | Outside cooling<br>Lubrificat. ext. | Internal cooling<br>Lubrificat. cent. | [bar] | Order no.<br>Nº de Code |
|---|---|---|---|---|---|---|---|---|---|
| **d1** | **x1** | **Spindel** | **T max** | **n max** | **i** | **Aussenkühlung** | **Innenkühlung** | **p** | **Bestellnummer** |
| 30 | 19,5 | WFB 20-12 | 10 | 8.000 | 1:1 | | | | MPU.Z25.B20.AA0.GA |

| | |
|---|---|
| **Passend für Maschine:**<br>suitable machines:<br>approprié pour la machine: | Gamma 20 |

# Tornos - Gamma

**Axial Bohr- und Fräskopf**
Axial drilling and milling head
Outil de perçage et de fraisage axiale

**WG 35**

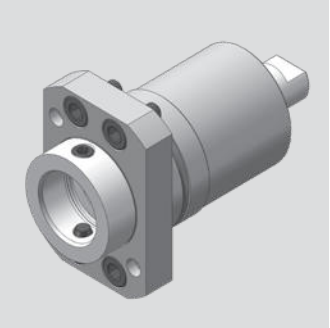

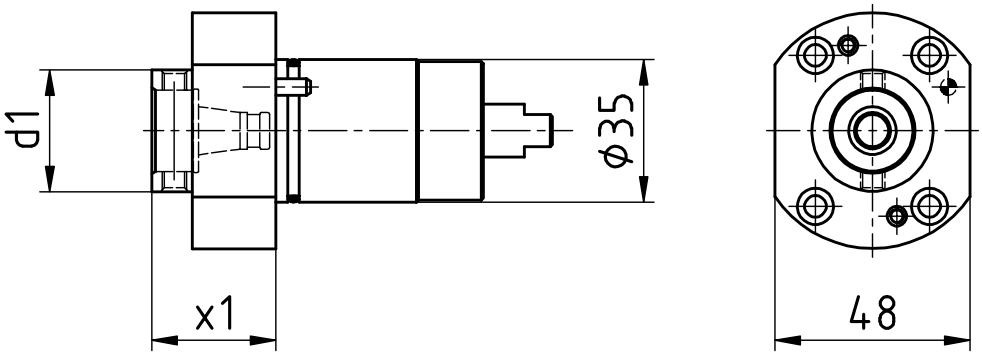


| [mm] | [mm] | Spindle<br>Broche | [Nm] | [rpm] | | Outside cooling<br>Lubrificat. ext. | Internal cooling<br>Lubrificat. cent. | [bar] | Order no.<br>Nº de Code |
|---|---|---|---|---|---|---|---|---|---|
| **d1** | **x1** | **Spindel** | **T max** | **n max** | **i** | **Aussenkühlung** | **Innenkühlung** | **p** | **Bestellnummer** |
| 30 | 30,5 | WFB 20-12 | 10 | 8.000 | 1:1 | | | | MPU.Z35.B20.AA0.GAR |

| | |
|---|---|
| **Passend für Maschine:**<br>suitable machines:<br>approprié pour la machine: | Gamma 20 |

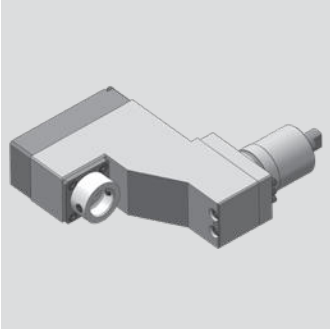

# Tornos - Gamma

**Radial Bohr- und Fräskopf**
Radial drilling and milling head
Outil de perçage et de fraisage radiale

**WG 35**

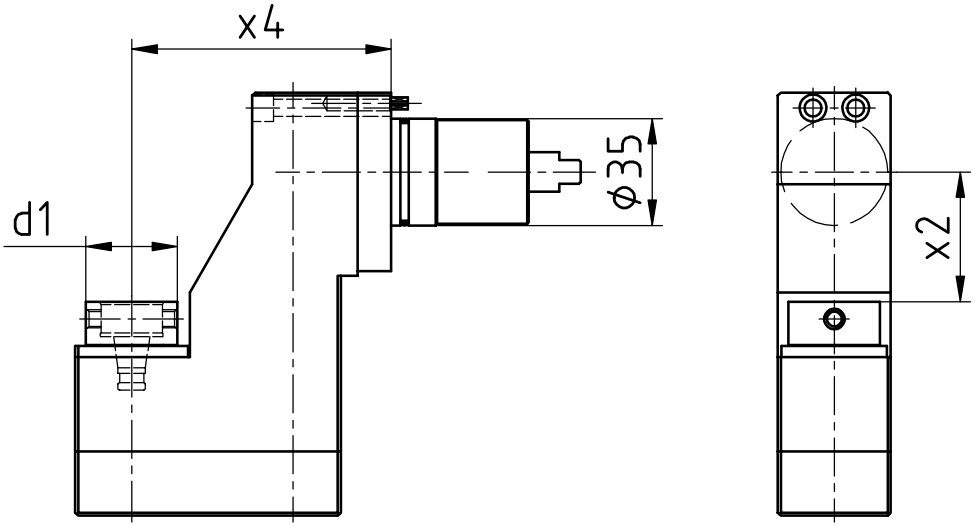


| [mm] | [mm] | [mm] | Spindle<br>Broche | [Nm] | [rpm] | | Outside cooling<br>Lubrificat. ext. | Internal cooling<br>Lubrificat. cent. | [bar] | Order no.<br>Nº de Code |
|---|---|---|---|---|---|---|---|---|---|---|
| **d1** | **x2** | **x4** | **Spindel** | **T max** | **n max** | **i** | **Aussenkühlung** | **Innenkühlung** | **p** | **Bestellnummer** |
| 30 | 42,5 | 85 | WFB 20-12 | 10 | 8.000 | 1:1 | | | | MPU.Z35.B20.RA0.GA |

| | |
|---|---|
| **Passend für Maschine:**<br>suitable machines:<br>approprié pour la machine: | Gamma 20 |

# Tornos - Gamma

**Radial Bohr- und Fräskopf**
Radial drilling and milling head
Outil de perçage et de fraisage radiale

**WG 35**

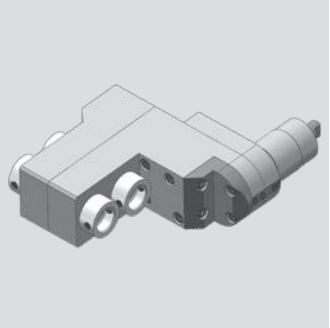

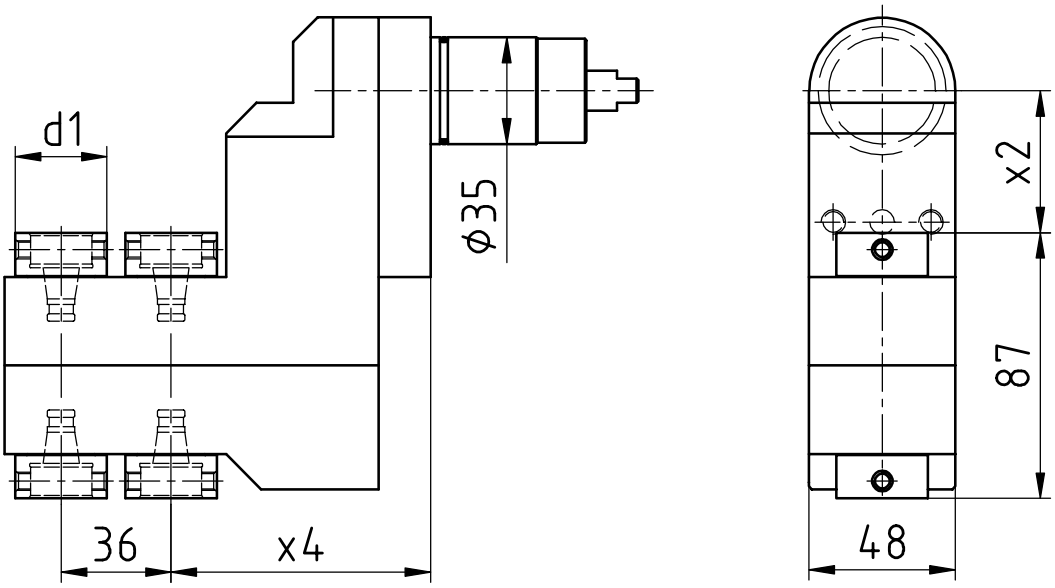


| [mm] | [mm] | [mm] | Spindle<br>Broche | [Nm] | [rpm] | | Outside cooling<br>Lubrificat. ext. | Internal cooling<br>Lubrificat. cent. | [bar] | Order no.<br>Nº de Code |
|---|---|---|---|---|---|---|---|---|---|---|
| **d1** | **x2** | **x4** | **Spindel** | **T max** | **n max** | **i** | **Aussenkühlung** | **Innenkühlung** | **p** | **Bestellnummer** |
| 30 | 46,5 | 85 | WFB 20-12 | 3 | 8.000 | 1:1 | | | | MPU.Z35.B20.4A0.GA |

| | |
|---|---|
| **Passend für Maschine:**<br>suitable machines:<br>approprié pour la machine: | Gamma 20 |

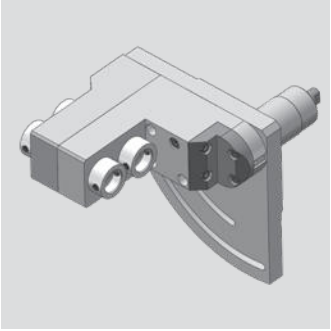

# Tornos - Gamma

**Radial Bohr- und Fräskopf**
Radial drilling and milling head
Outil de perçage et de fraisage radiale

**WG 35**

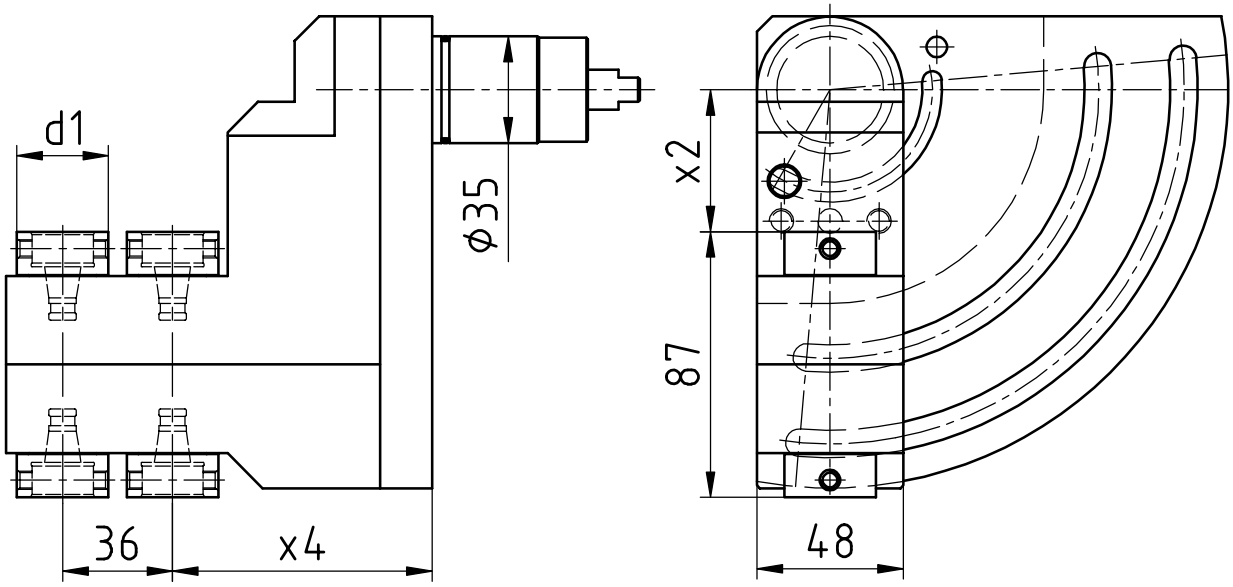


| [mm] | [mm] | [mm] | Spindle<br>Broche | [Nm] | [rpm] | | Outside cooling<br>Lubrificat. ext. | Internal cooling<br>Lubrificat. cent. | [bar] | Order no.<br>Nº de Code |
|---|---|---|---|---|---|---|---|---|---|---|
| **d1** | **x2** | **x4** | **Spindel** | **T max** | **n max** | **i** | **Aussenkühlung** | **Innenkühlung** | **p** | **Bestellnummer** |
| 30 | 46,5 | 85 | WFB 20-12 | 3 | 8.000 | 1:1 | | | | MPU.Z35.B20.4S0.GA |

| | |
|---|---|
| **Passend für Maschine:**<br>suitable machines:<br>approprié pour la machine: | Gamma 20 |

# Tornos - Gamma

**Gewindewirbelapparat**
Thread whirling unit
Unité de tourbillonnement

**WG 35**

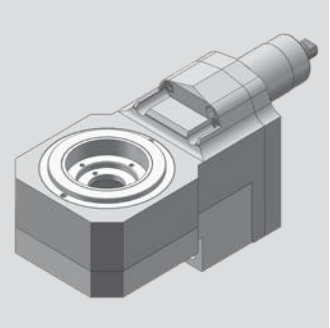

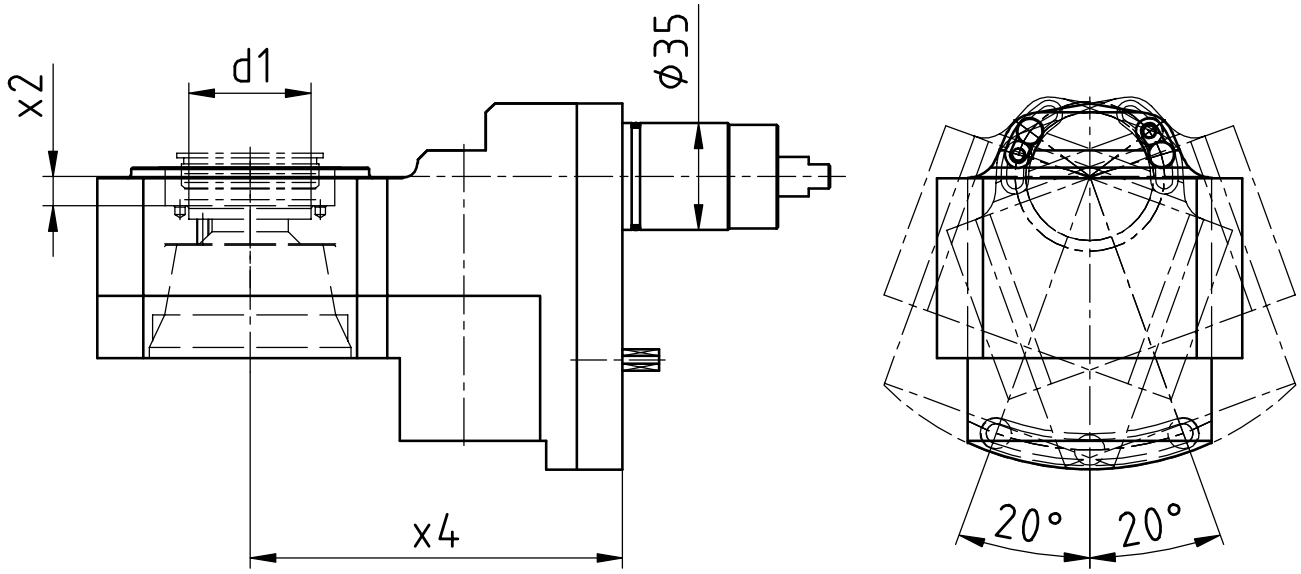


| [mm] | [mm] | [mm] | Spindle<br>Broche | [Nm] | [rpm] | | Outside cooling<br>Lubrificat. ext. | Internal cooling<br>Lubrificat. cent. | [bar] | Order no.<br>Nº de Code |
|---|---|---|---|---|---|---|---|---|---|---|
| **d1** | **x2** | **x4** | **Spindel** | **T max** | **n max** | **i** | **Aussenkühlung** | **Innenkühlung** | **p** | **Bestellnummer** |
| 40 | 9,5 | 122 | MONO | 16 | 6.932 | 1,154:1 | x | | | MPU.Z35.0800.GA |

| | |
|---|---|
| **Passend für Maschine:**<br>suitable machines:<br>approprié pour la machine: | Gamma 20 |

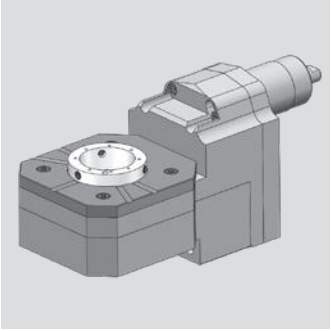

# Tornos - Gamma

**Gewindewirbelapparat modular**
Thread whirling unit
Unité de tourbillonnement

**WG 35**

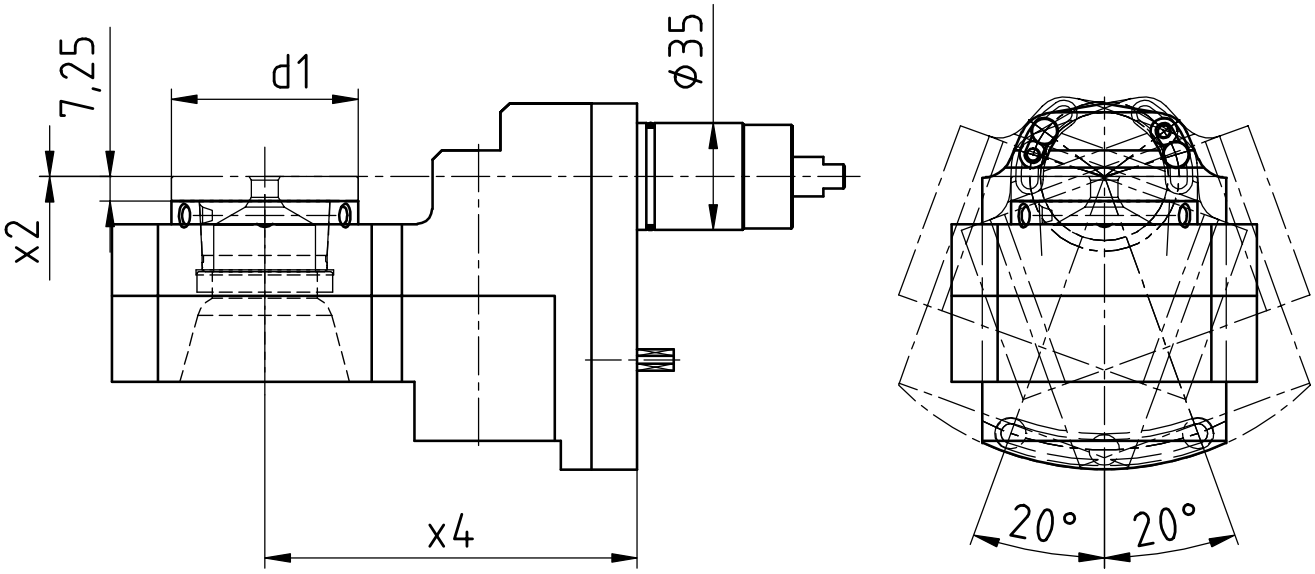


| [mm] | [mm] | [mm] | Spindle<br>Broche | [Nm] | [rpm] | | Outside cooling<br>Lubrificat. ext. | Internal cooling<br>Lubrificat. cent. | [bar] | Order no.<br>Nº de Code |
|---|---|---|---|---|---|---|---|---|---|---|
| **d1** | **x2** | **x4** | **Spindel** | **T max** | **n max** | **i** | **Aussenkühlung** | **Innenkühlung** | **p** | **Bestellnummer** |
| 54 | 0 | 122 | WFW 50 | 16 | 6.932 | 1,154:1 | x | | | MPU.Z35.M0800.GA |

| | |
|---|---|
| **Passend für Maschine:**<br>suitable machines:<br>approprié pour la machine: | Gamma 20 |

# Tornos - Swiss Baureihen

**Axial Bohr- und Fräskopf**
Axial drilling and milling head
Outil de perçage et de fraisage axiale

**WG 35**

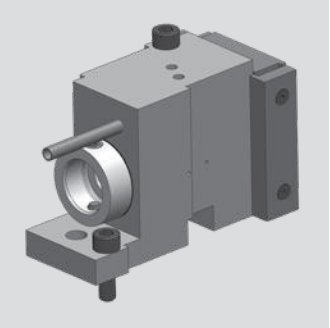

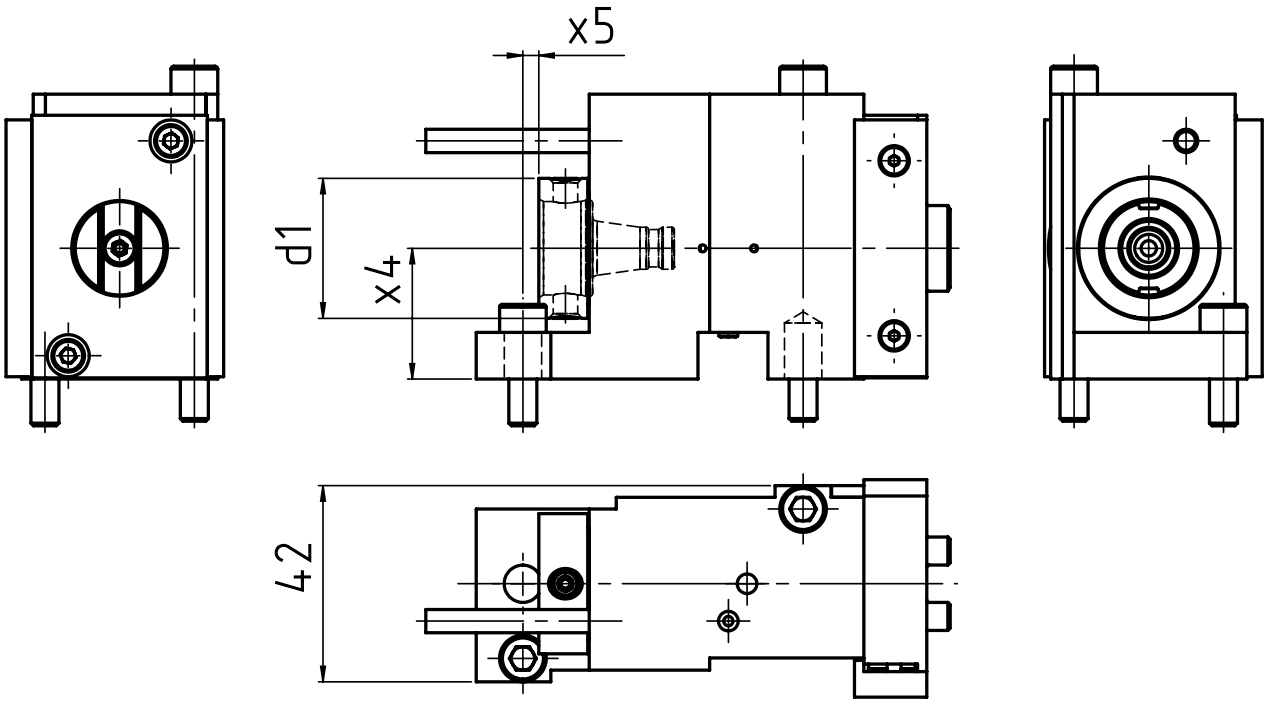


| [mm] | [mm] | [mm] | Spindle<br>Broche | [Nm] | [rpm] | | Outside cooling<br>Lubrificat. ext. | Internal cooling<br>Lubrificat. cent. | [bar] | Order no.<br>Nº de Code |
|---|---|---|---|---|---|---|---|---|---|---|
| **d1** | **x4** | **x5** | **Spindel** | **T max** | **n max** | **i** | **Aussenkühlung** | **Innenkühlung** | **p** | **Bestellnummer** |
| 30 | 28 | 3,5 | WFB 20-12 | 10 | 6.000 | 1:1 | x | | | MPU.TO.B20.H28.DGST |
| 30 | 28 | 3,5 | WFB 20-12 | 10 | 6.000 | 1:1 | x | x | 120 | MPU.TO.B20.H28.DGST.IK |

| | | | |
|---|---|---|---|
| **Passend für Maschine:**<br>suitable machines:<br>approprié pour la machine: | DT 13 | GT 26 | ST 26 |
| | DT 26 | GT 32 | |
| | GT 13 | GT 32B | |

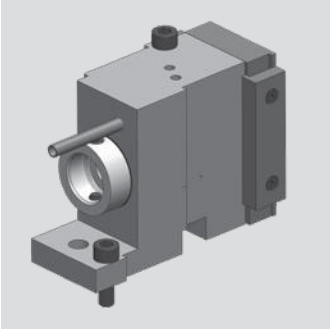

# Tornos - Swiss Baureihen

**Axial Bohr- und Fräskopf**
Axial drilling and milling head
Outil de perçage et de fraisage axiale

**WG 35**

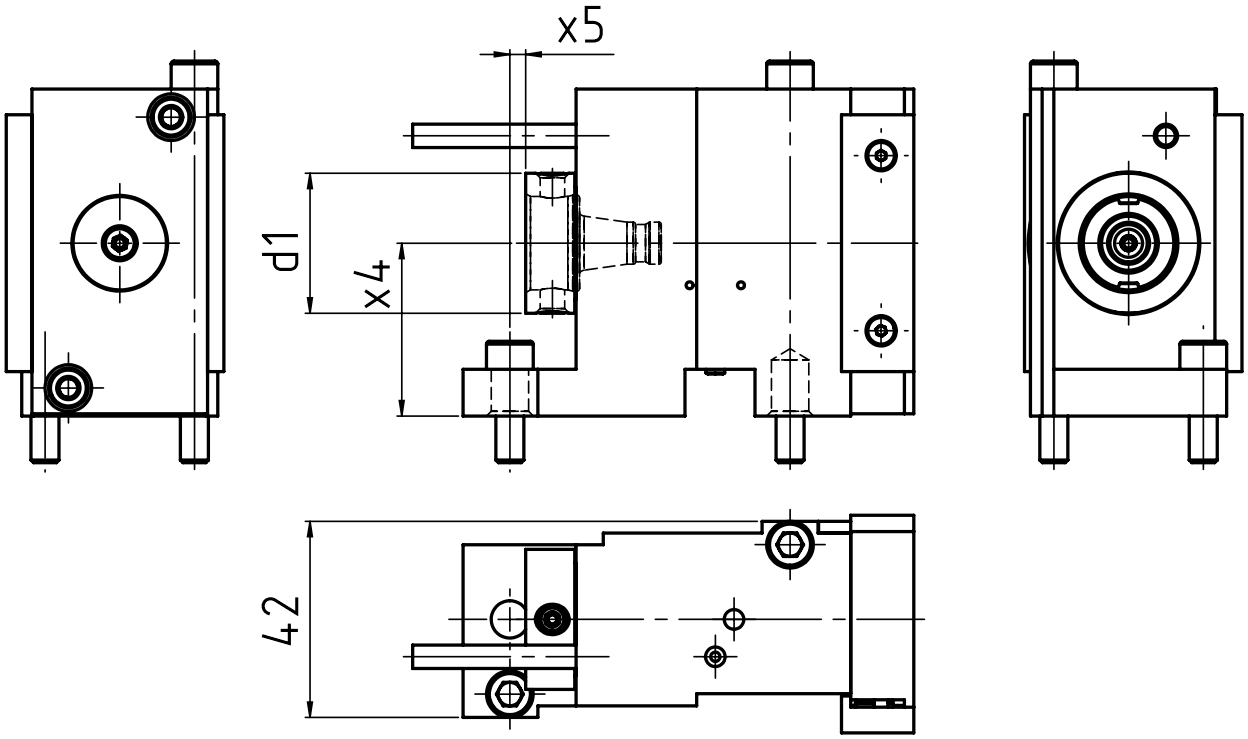


| [mm] | [mm] | [mm] | Spindle<br>Broche | [Nm] | [rpm] | | Outside cooling<br>Lubrificat. ext. | Internal cooling<br>Lubrificat. cent. | [bar] | Order no.<br>Nº de Code |
|---|---|---|---|---|---|---|---|---|---|---|
| **d1** | **x4** | **x5** | **Spindel** | **T max** | **n max** | **i** | **Aussenkühlung** | **Innenkühlung** | **p** | **Bestellnummer** |
| 30 | 37 | 3,4 | WFB 20-12 | 10 | 6.000 | 1:1 | x | | | MPU.TO.B20.H37.DGST |
| 30 | 37 | 3,4 | WFB 20-12 | 10 | 6.000 | 1:1 | x | x | 120 | MPU.TO.B20.H37.DGST.IK |

| | | |
|---|---|---|
| **Passend für Maschine:**<br>suitable machines:<br>approprié pour la machine: | DT 26<br>GT 13<br>GT 26 | GT 32<br>GT 32B<br>ST 26 |

# Tornos - Swiss Baureihen

**Axial Bohr- und Fräskopf**
Axial drilling and milling head
Outil de perçage et de fraisage axiale

**WG 35**

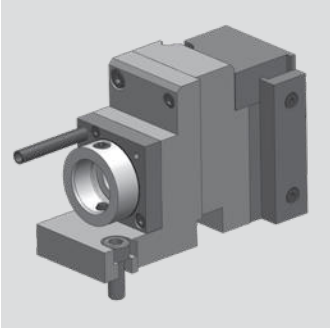

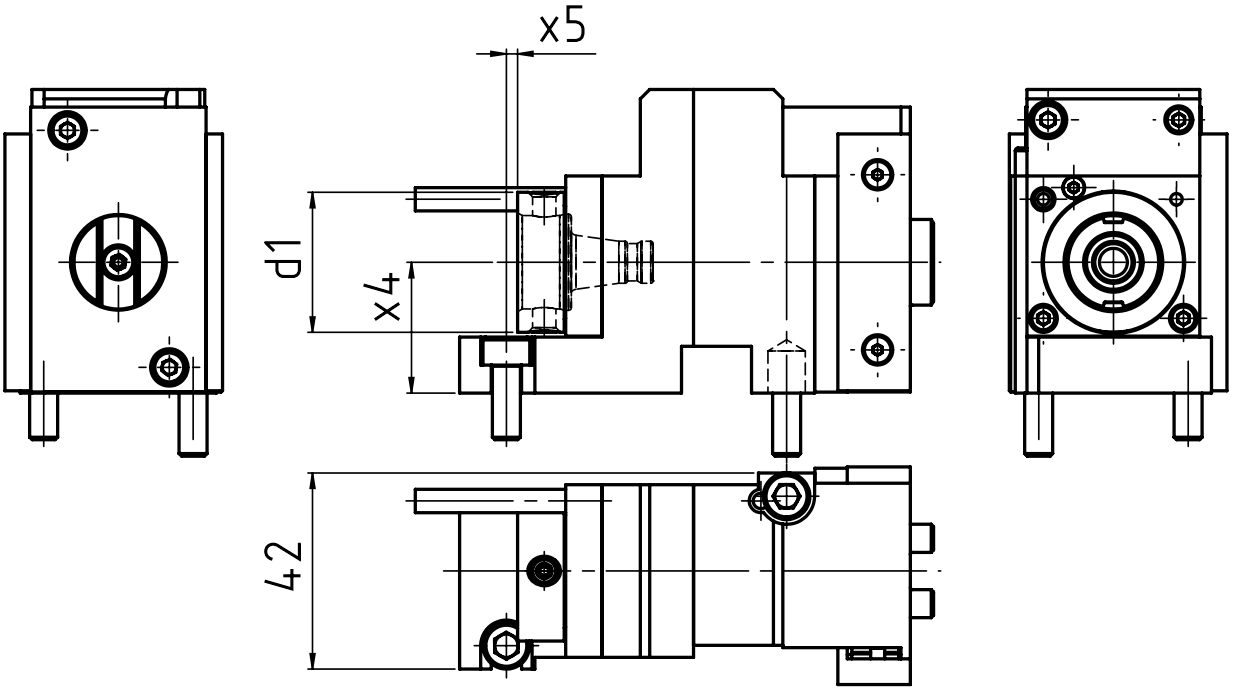


| [mm] | [mm] | [mm] | Spindle<br>Broche | [Nm] | [rpm] | | Outside cooling<br>Lubrificat. ext. | Internal cooling<br>Lubrificat. cent. | [bar] | Order no.<br>Nº de Code |
|---|---|---|---|---|---|---|---|---|---|---|
| **d1** | **x4** | **x5** | **Spindel** | **T max** | **n max** | **i** | **Aussenkühlung** | **Innenkühlung** | **p** | **Bestellnummer** |
| 30 | 28 | 2,4 | WFB 20-12 | 3 | 18.000 | 1:3 | x | | | MPU.TO.B20.S28.DGST |

| | | | |
|---|---|---|---|
| **Passend für Maschine:**<br>suitable machines:<br>approprié pour la machine: | DT 13<br>DT 26<br>GT 13 | GT 26<br>GT 32<br>GT 32B | ST 26 |

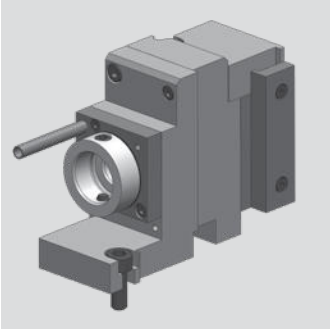

# Tornos - Swiss Baureihen

**Axial Bohr- und Fräskopf**
Axial drilling and milling head
Outil de perçage et de fraisage axiale

**WG 35**

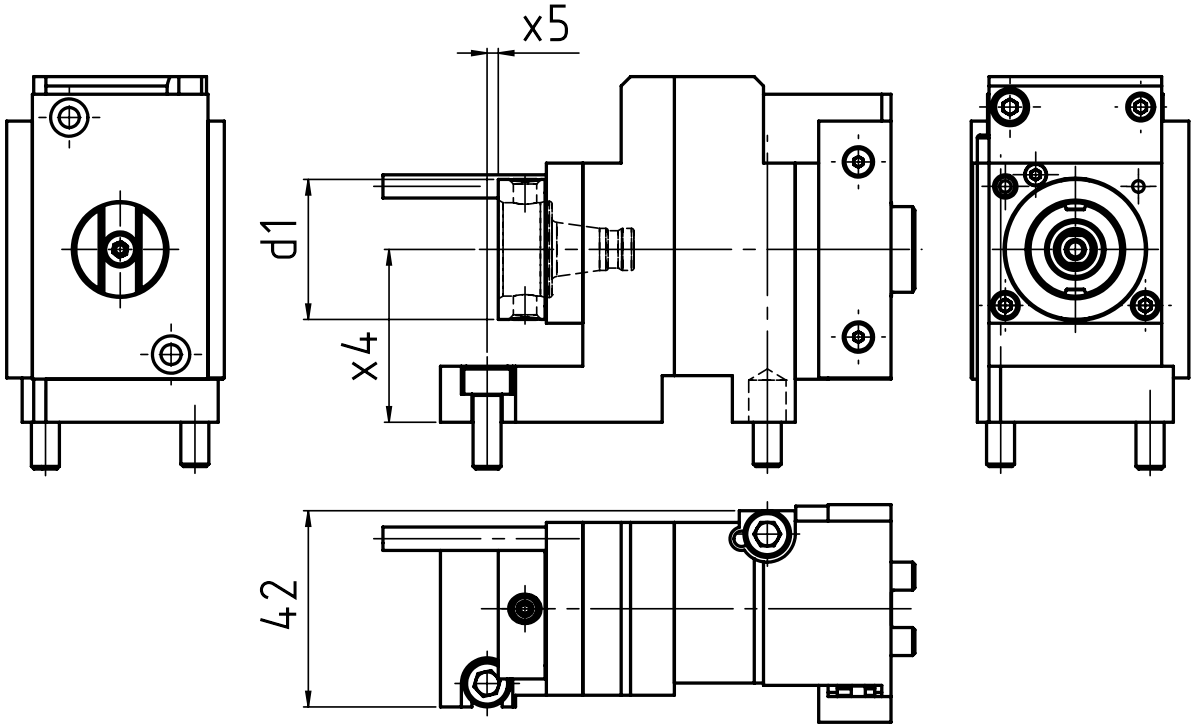


| [mm] | [mm] | [mm] | Spindle<br>Broche | [Nm] | [rpm] | | Outside cooling<br>Lubrificat. ext. | Internal cooling<br>Lubrificat. cent. | [bar] | Order no.<br>Nº de Code |
|---|---|---|---|---|---|---|---|---|---|---|
| **d1** | **x4** | **x5** | **Spindel** | **T max** | **n max** | **i** | **Aussenkühlung** | **Innenkühlung** | **p** | **Bestellnummer** |
| 30 | 37 | 2,4 | WFB 20-12 | 3 Nm | 18.000 | 1:3 | x | | | MPU.TO.B20.S37.DGST |

| | | |
|---|---|---|
| **Passend für Maschine:**<br>suitable machines:<br>approprié pour la machine: | DT 26<br>GT 13<br>GT 26 | GT 32<br>ST 26 |

# Tornos - Swiss Baureihen

**Axial Bohr- und Fräskopf**
Axial drilling and milling head
Outil de perçage et de fraisage axiale

**WG 35**

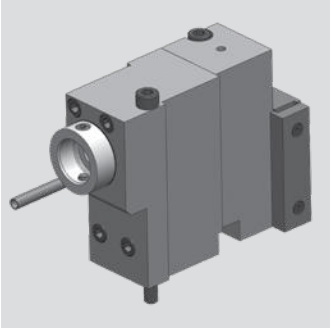

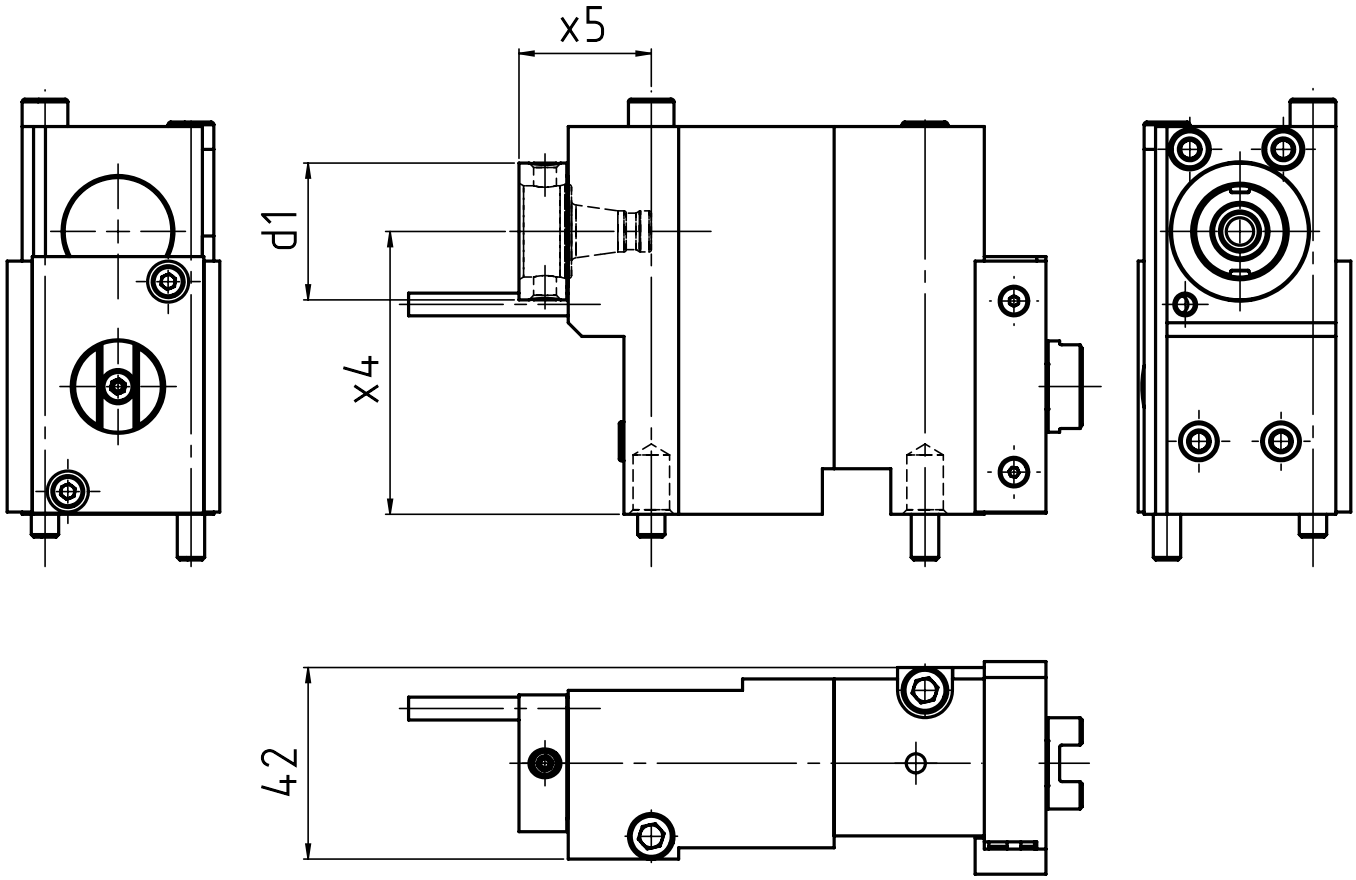


| [mm] | [mm] | [mm] | Spindle<br>Broche | [Nm] | [rpm] | | Outside cooling<br>Lubrificat. ext. | Internal cooling<br>Lubrificat. cent. | [bar] | Order no.<br>Nº de Code |
|---|---|---|---|---|---|---|---|---|---|---|
| **d1** | **x4** | **x5** | **Spindel** | **T max** | **n max** | **i** | **Aussenkühlung** | **Innenkühlung** | **p** | **Bestellnummer** |
| 30 | 62 | 29 | WFB 20-12 | 20 | 3.000 | 2:1 | x | | | MPU.TO.B20.H62.DGST |

| | | |
|---|---|---|
| **Passend für Maschine:**<br>suitable machines:<br>approprié pour la machine: | DT 26<br>GT 13<br>GT 26 | GT 32<br>ST 26 |

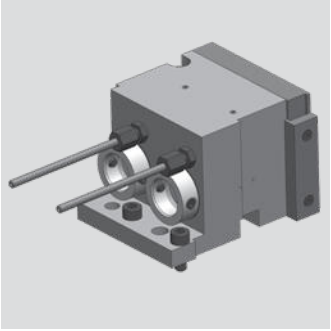

# Tornos - Swiss Baureihen

**Axial Bohr- und Fräskopf**
Axial drilling and milling head
Outil de perçage et de fraisage axiale

**WG 35**

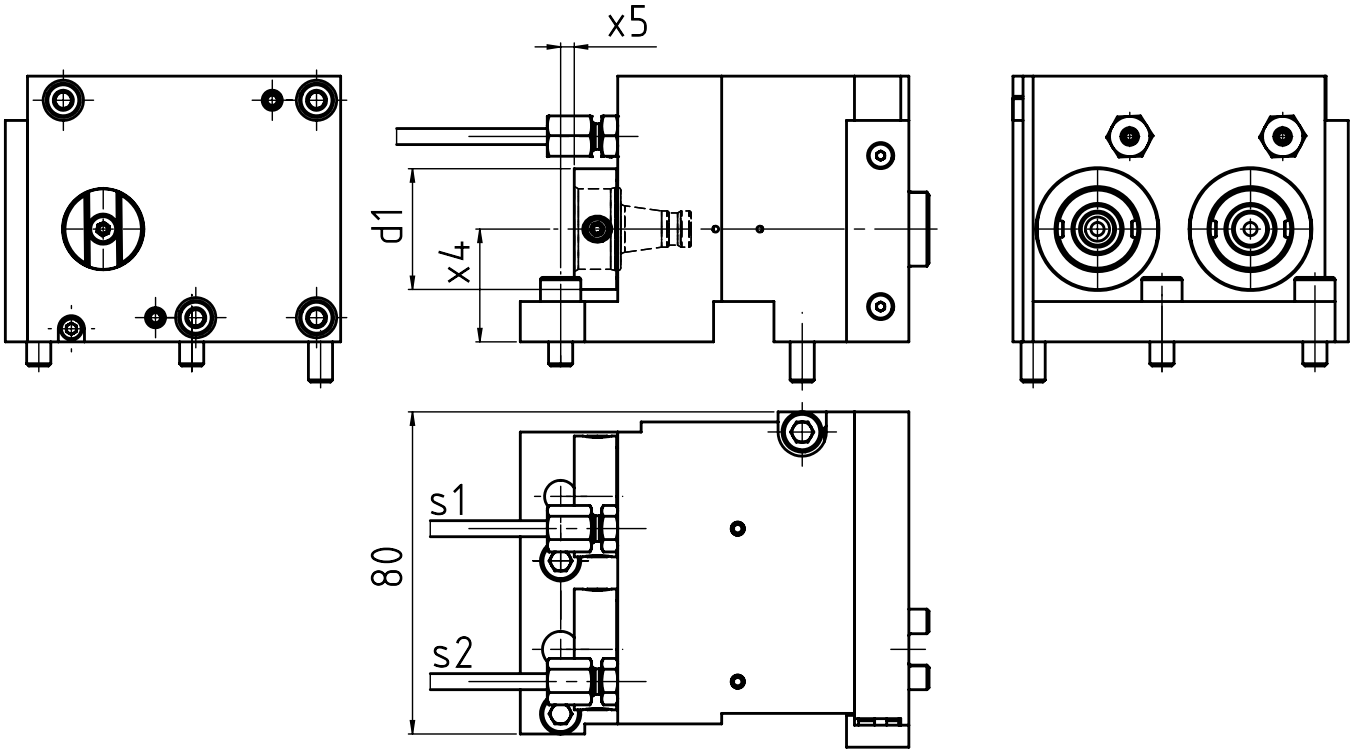


| [mm] | [mm] | [mm] | Spindle<br>Broche | [Nm] | [rpm] | | Outside cooling<br>Lubrificat. ext. | Internal cooling<br>Lubrificat. cent. | [bar] | Order no.<br>Nº de Code |
|---|---|---|---|---|---|---|---|---|---|---|
| **d1** | **x4** | **x5** | **Spindel** | **T max** | **n max** | **i** | **Aussenkühlung** | **Innenkühlung** | **p** | **Bestellnummer** |
| 30 | 28 | 3,4 | WFB 20-12 | 10* | 6.000* | 1:1* | x | x | 120 | MPU.TO.B20.ME0.DGST |

| **Passend für Maschine:**<br>suitable machines:<br>approprié pour la machine: | DT 13<br>DT 26<br>GT 13 | GT 26<br>GT 32<br>GT 32B | ST 26 |
|---|---|---|---|

* S1: 10 Nm/6.000 rpm/i=1:1
S2: 3 Nm/18.000 rpm/i=1:3

# Tornos - Swiss Baureihen

**Radial Bohr- und Fräskopf**
Radial drilling and milling head
Outil de perçage et de fraisage radiale

**WG 35**

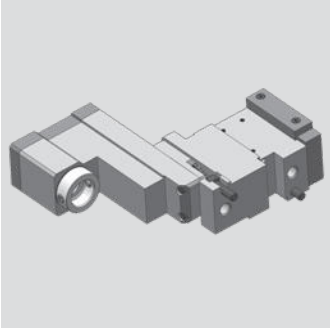

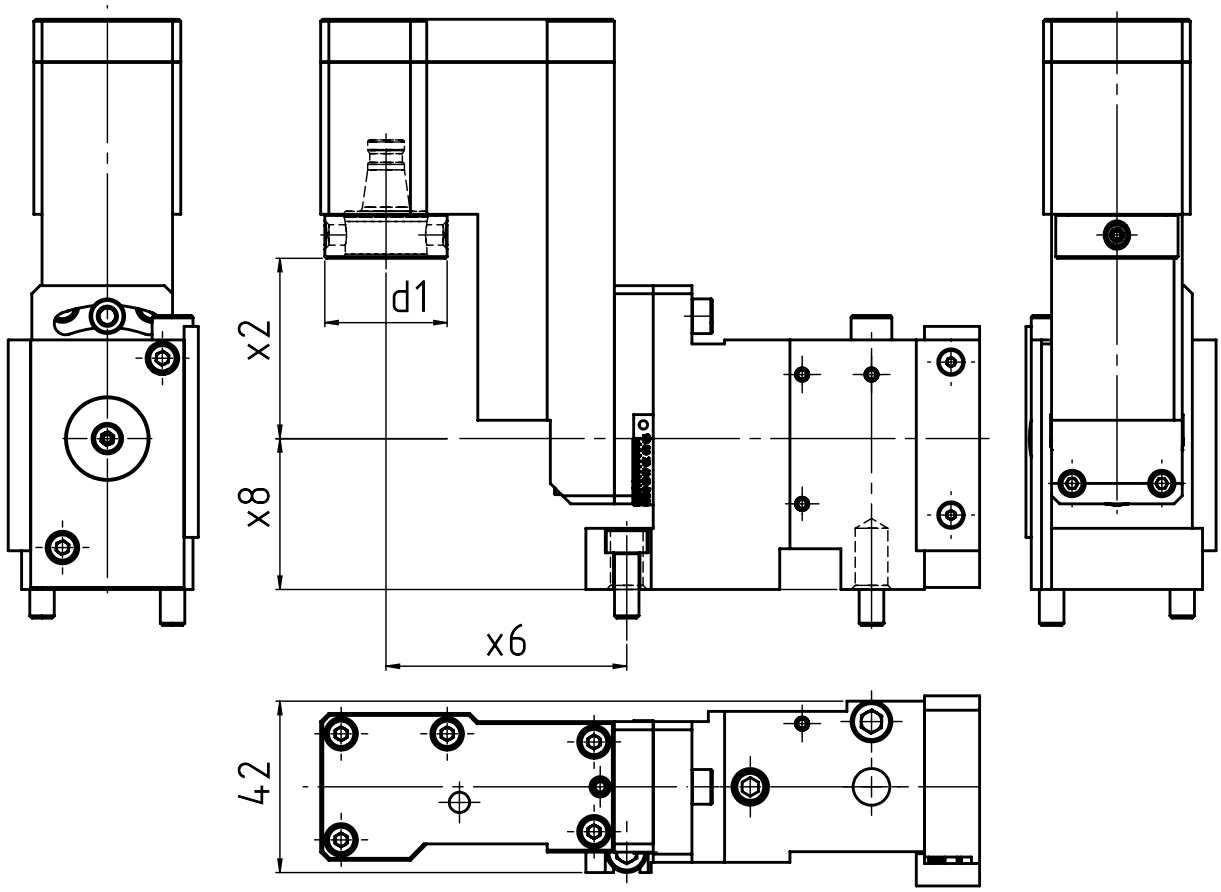


| [mm] | [mm] | [mm] | [mm] | Spindle<br>Broche | [Nm] | [rpm] | | Outside cooling<br>Lubrificat. ext. | Internal cooling<br>Lubrificat. cent. | [bar] | Order no.<br>Nº de Code |
|---|---|---|---|---|---|---|---|---|---|---|---|
| **d1** | **x2** | **x6** | **x8** | **Spindel** | **T max** | **n max** | **i** | **Aussenkühlung** | **Innenkühlung** | **p** | **Bestellnummer** |
| 30 | 44,2 | 59 | 37 | WFB 20-12 | 3 | 6.000 | 1:1 | | | | MPU.TO.B20.S200.DGST |
| 30 | 44,2 | 59 | 37 | WFB 20-12 | 3 | 6.000 | 1:1 | | x | 120 | MPU.TO.B20.S200.DGSTIK |

| | | |
|---|---|---|
| **Passend für Maschine:**<br>suitable machines:<br>approprié pour la machine: | DT 26<br>GT 13<br>GT 26 | GT 32<br>ST 26 |

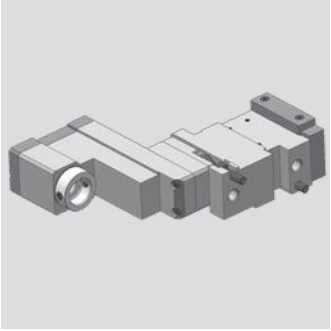

# Tornos - Swiss Baureihen

**Radial Bohr- und Fräskopf**
Radial drilling and milling head
Outil de perçage et de fraisage radiale

**WG 35**

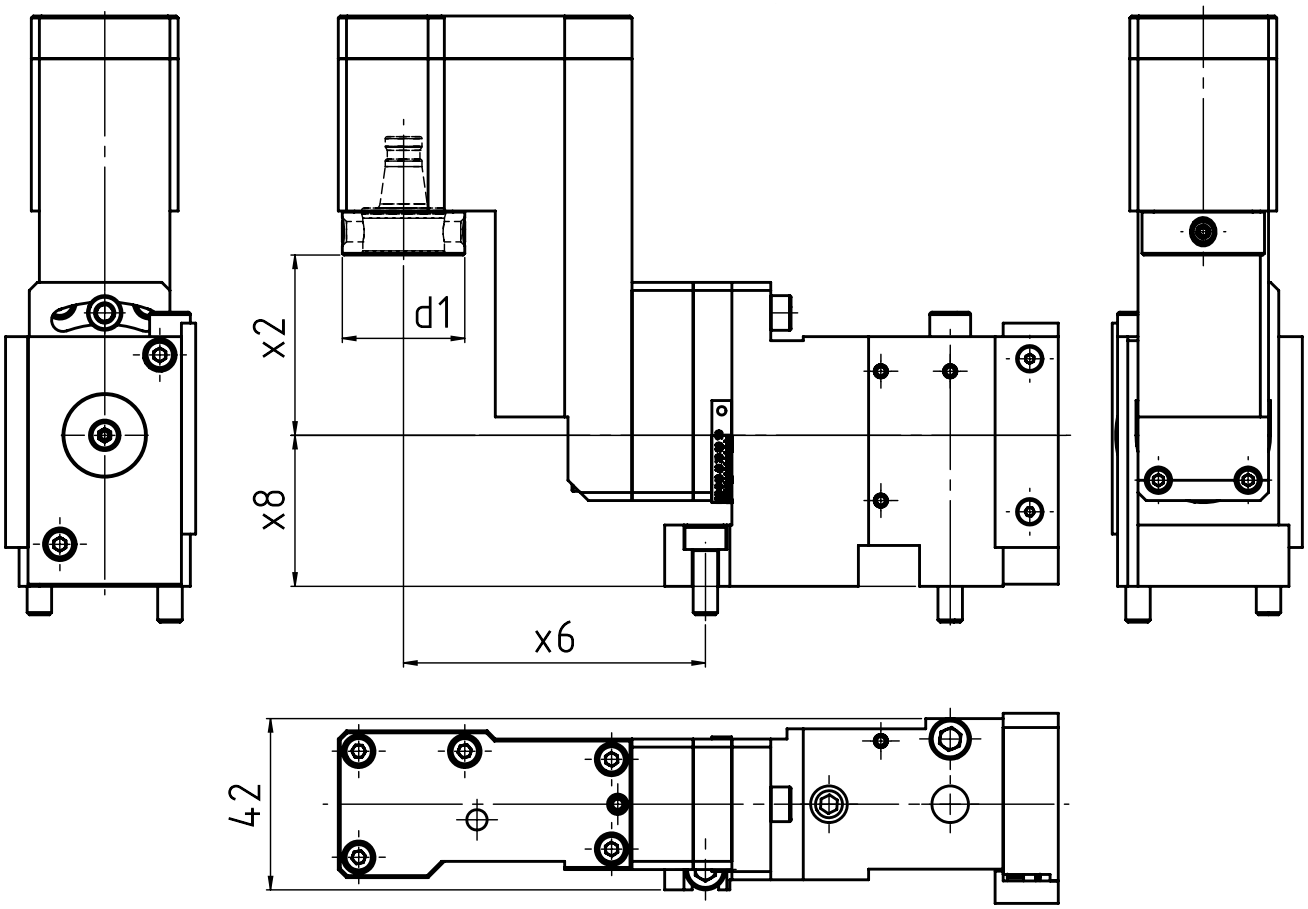


| [mm] | [mm] | [mm] | [mm] | Spindle<br>Broche | [Nm] | [rpm] | | Outside cooling<br>Lubrificat. ext. | Internal cooling<br>Lubrificat. cent. | [bar] | Order no.<br>Nº de Code |
|---|---|---|---|---|---|---|---|---|---|---|---|
| **d1** | **x2** | **x6** | **x8** | **Spindel** | **T max** | **n max** | **i** | **Aussenkühlung** | **Innenkühlung** | **p** | **Bestellnummer** |
| 30 | 44,2 | 74 | 37 | WFB 20-12 | 3 | 6.000 | 1:1 | | | | MPU.TO.B20.S210.DGST |

| | | |
|---|---|---|
| **Passend für Maschine:**<br>suitable machines:<br>approprié pour la machine: | DT 26<br>GT 13<br>GT 26 | GT 32<br>ST 26 |

# Tornos - Swiss Baureihen

**Radial Bohr- und Fräskopf**
Radial drilling and milling head
Outil de perçage et de fraisage radiale

**WG 35**

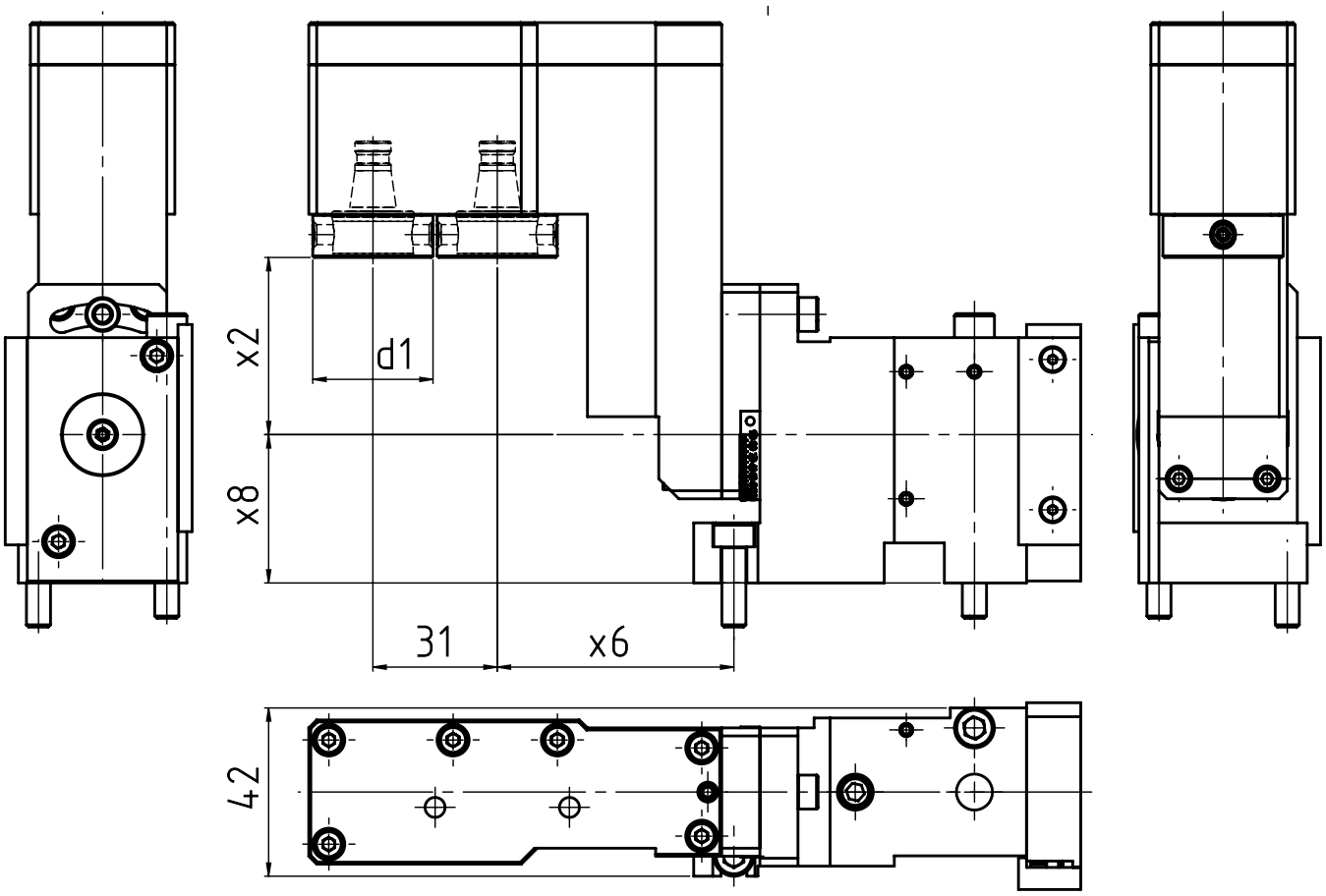


| [mm] | [mm] | [mm] | [mm] | Spindle<br>Broche | [Nm] | [rpm] | | Outside cooling<br>Lubrificat. ext. | Internal cooling<br>Lubrificat. cent. | [bar] | Order no.<br>Nº de Code |
|---|---|---|---|---|---|---|---|---|---|---|---|
| **d1** | **x2** | **x6** | **x8** | **Spindel** | **T max** | **n max** | **i** | **Aussenkühlung** | **Innenkühlung** | **p** | **Bestellnummer** |
| 30 | 44,2 | 49 | 37 | WFB 20-12 | 3 | 6.000 | 1:1 | | | | MPU.TO.B20.2M0S200DGST |

| | | |
|---|---|---|
| **Passend für Maschine:**<br>suitable machines:<br>approprié pour la machine: | DT 26<br>GT 13<br>GT 26 | GT 32<br>ST 26 |

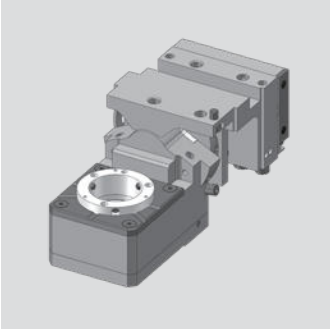

# Tornos - Swiss Baureihen

**Gewindewirbelapparat modular**
Thread whirling unit
Unité de tourbillonnement

**WG 35**

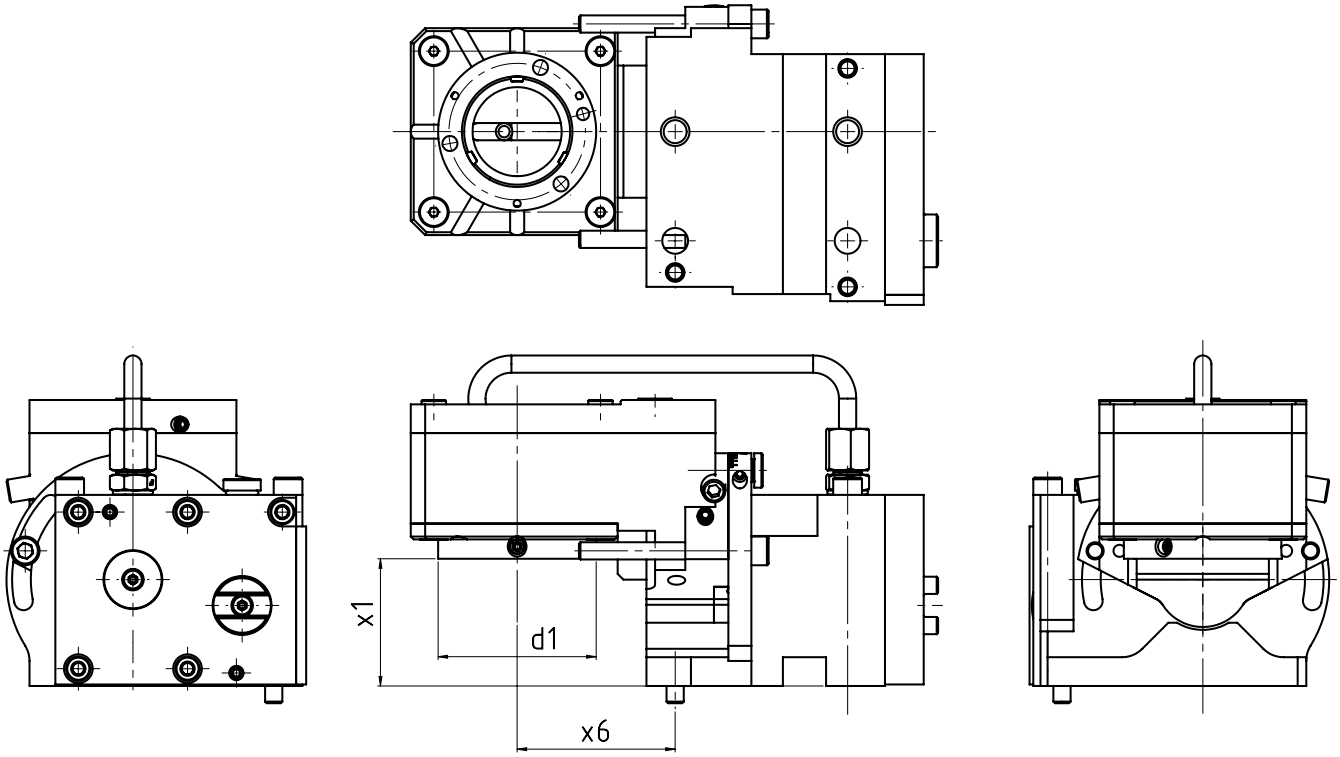


| [mm] | [mm] | [mm] | Spindle<br>Broche | [Nm] | [rpm] | | Outside cooling<br>Lubrificat. ext. | Internal cooling<br>Lubrificat. cent. | [bar] | Order no.<br>Nº de Code |
|---|---|---|---|---|---|---|---|---|---|---|
| **d1** | **x1** | **x6** | **Spindel** | **T max** | **n max** | **i** | **Aussenkühlung** | **Innenkühlung** | **p** | **Bestellnummer** |
| 55 | 44,25 | 55 | WFW 50 | 16 | 3.593 | 1,67:1 | x | | | MPU.TO.M0800.DGST |

| | | |
|---|---|---|
| **Passend für Maschine:**<br>suitable machines:<br>approprié pour la machine: | DT 26<br>GT 13<br>GT 26 | GT 32<br>ST 26 |

# Tornos - Swiss Baureihen

**Radial-Bohr- und Fräskopf (Mehrkantschlagen)**
radial drilling and milling head (polyhedral beat)
Outil Rotatif Radial de Pertage et de Fraisage (battement polyedrique)

**WG 35**

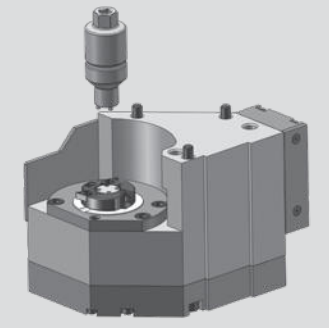

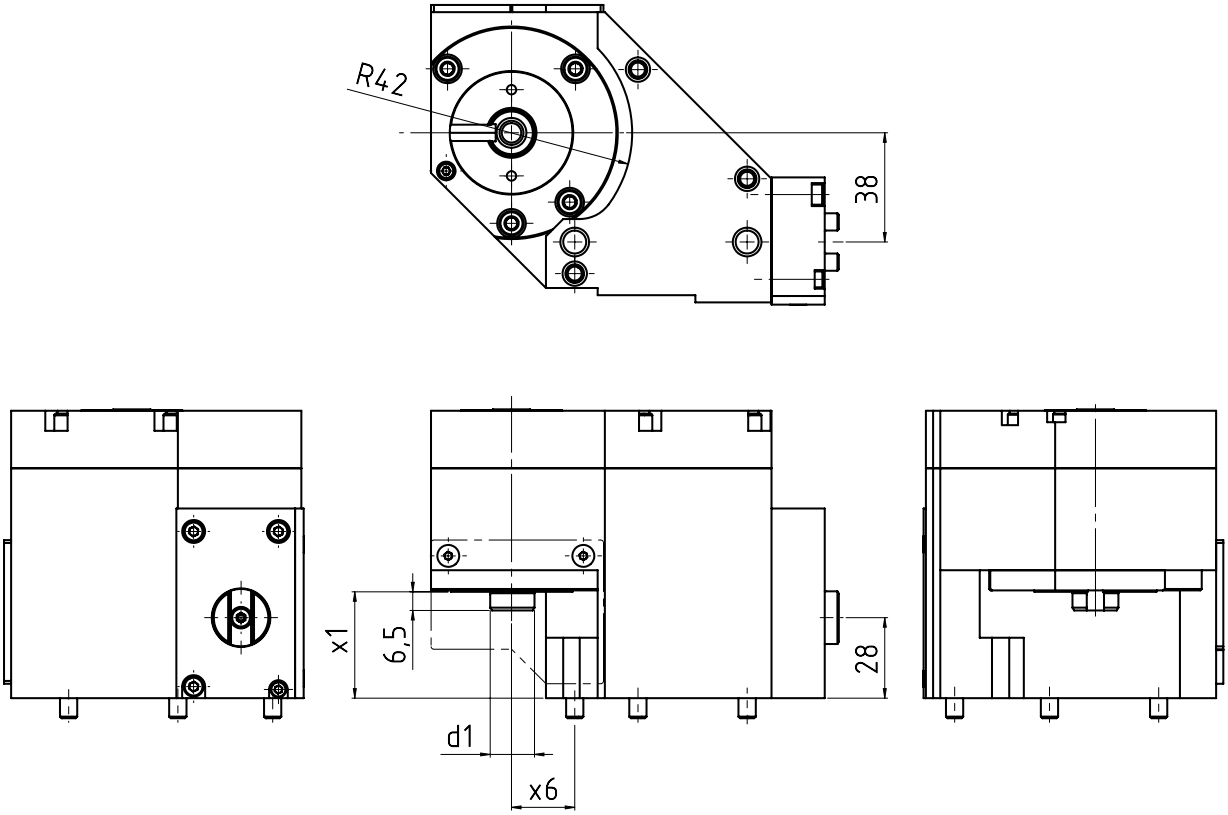


| [mm] | [mm] | [mm] | Spindle<br>Broche | [Nm] | [rpm] | | Outside cooling<br>Lubrificat. ext. | Internal cooling<br>Lubrificat. cent. | [bar] | Order no.<br>Nº de Code |
|---|---|---|---|---|---|---|---|---|---|---|
| **d1** | **x1** | **x6** | **Spindel** | **T max** | **n max** | **i** | **Aussenkühlung** | **Innenkühlung** | **p** | **Bestellnummer** |
| 30 | 37 | 22 | | 16 | 3.750 | 1,6:1 | | | | MPU.T0.0900.DGST |

| **Passend für Maschine:**<br>suitable machines:<br>approprié pour la machine: | DT 26<br>GT 13<br>GT 26 | GT 32<br>ST 26 |
|---|---|---|

# Modulare Aggregatetechnik

# TSUGAMI

## Katalog TS-02

# WFB-Adapterpool

Indications for the customer

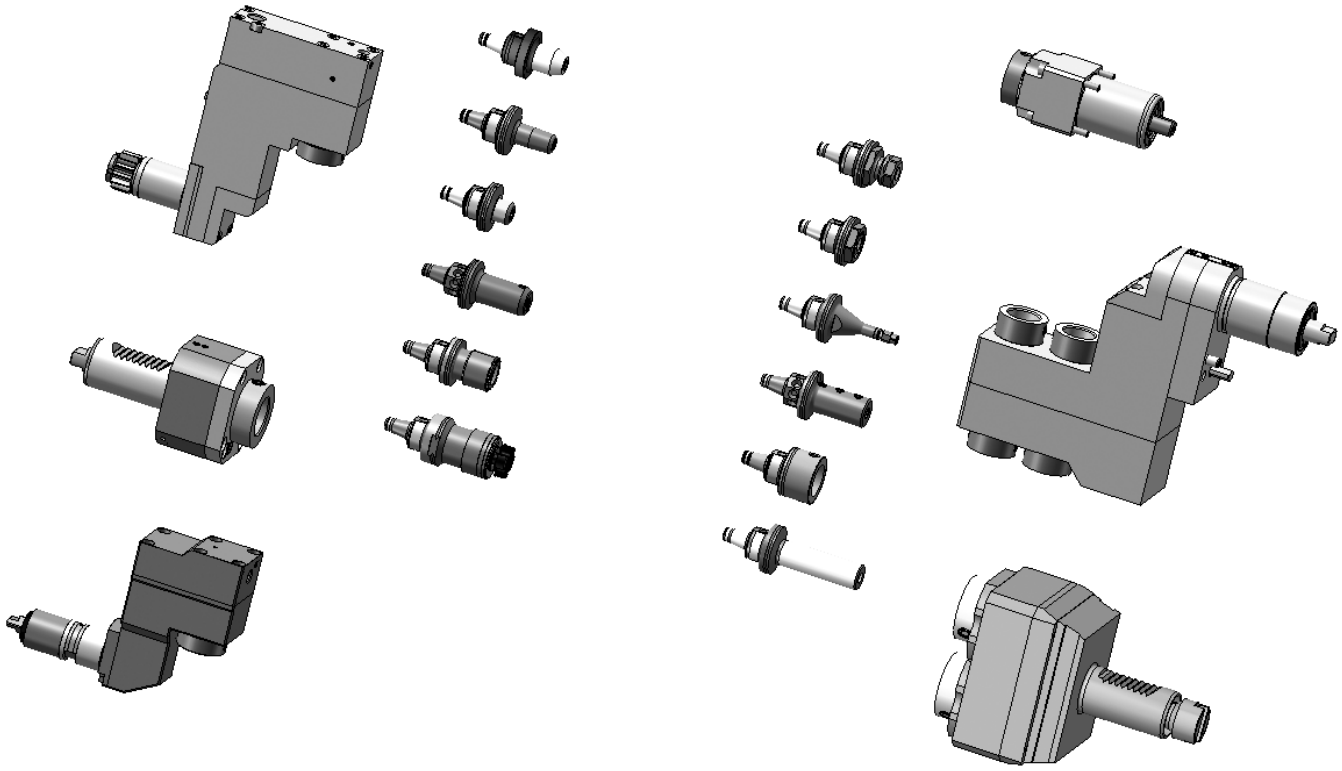

**Mit den Werkzeughaltern von W&F in statischer oder angetriebener Ausführung und dem WFB-Adaptersystem haben Sie die einzigartige Möglichkeit, für sämtliche Hersteller egal ob im Kurzdrehen, Langdrehen oder Mehrspindeldrehen ein durchgängiges modulares Werkzeugsystem einzusetzen.**

The W&F tool holders are in static or driven performance and beyond that, the WFB-adapter system offers you an unique option to use it for every machine manufacturer whether you are manufacturer producing with swiss type lathes, standard turning machines or multispindle turning machines, WFB is suitable.

# Tsugami

**Axial Bohr- und Fräskopf**
Axial drilling and milling head
Outil de perçage et de fraisage axiale

**WG 35**

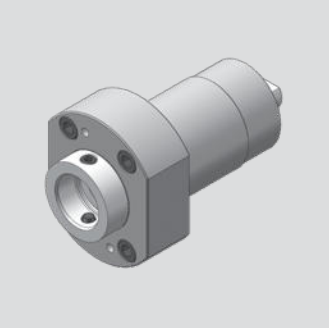

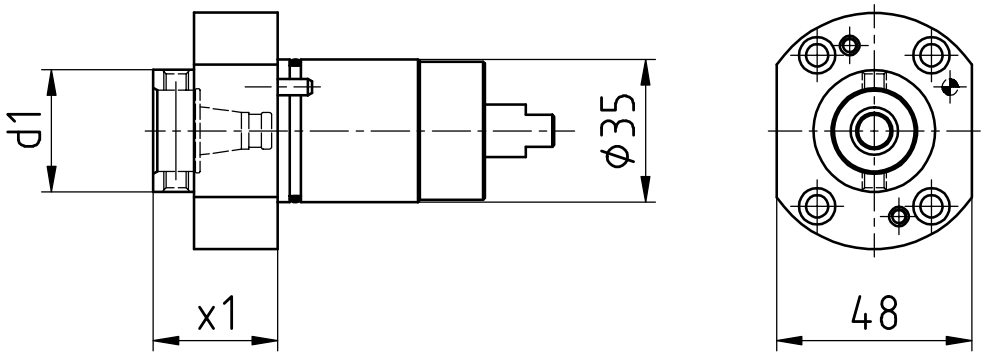


| [mm] | [mm] | Spindle<br>Broche | [Nm] | [rpm] | | Outside cooling<br>Lubrificat. ext. | Internal cooling<br>Lubrificat. cent. | [bar] | Order no.<br>Nº de Code |
|---|---|---|---|---|---|---|---|---|---|
| **d1** | **x1** | **Spindel** | **T max** | **n max** | **i** | **Aussenkühlung** | **Innenkühlung** | **p** | **Bestellnummer** |
| 30 | 30,5 | WFB 20-12 | 10 | 8.000 | 1:1 | | | | MPU.Z35.B20.AA0.TS |

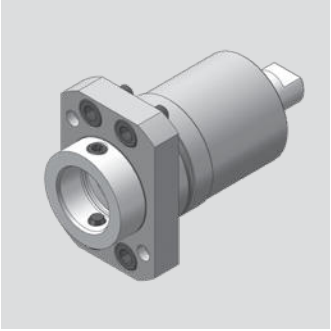

# Tsugami

**Axial Bohr- und Fräskopf**
Axial drilling and milling head
Outil de perçage et de fraisage axiale

**WG 35**

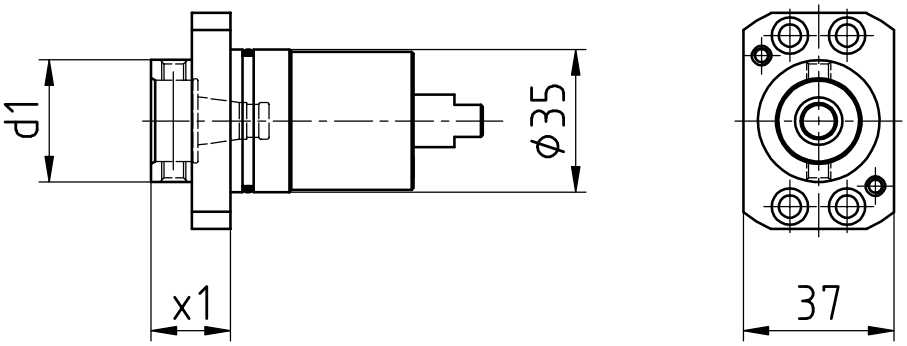


| [mm] | [mm] | Spindle<br>Broche | [Nm] | [rpm] | | Outside cooling<br>Lubrificat. ext. | Internal cooling<br>Lubrificat. cent. | [bar] | Order no.<br>Nº de Code |
|---|---|---|---|---|---|---|---|---|---|
| **d1** | **x1** | **Spindel** | **T max** | **n max** | **i** | **Aussenkühlung** | **Innenkühlung** | **p** | **Bestellnummer** |
| 30 | 19,5 | WFB 20-12 | 10 | 8.000 | 1:1 | | | | MPU.Z35.B20.AA0.TSR |

# Tsugami

**Radial Bohr- und Fräskopf**
Radial drilling and milling head
Outil de perçage et de fraisage radiale

**WG 35**

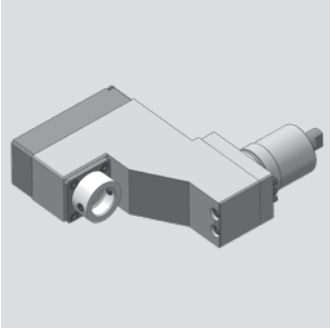

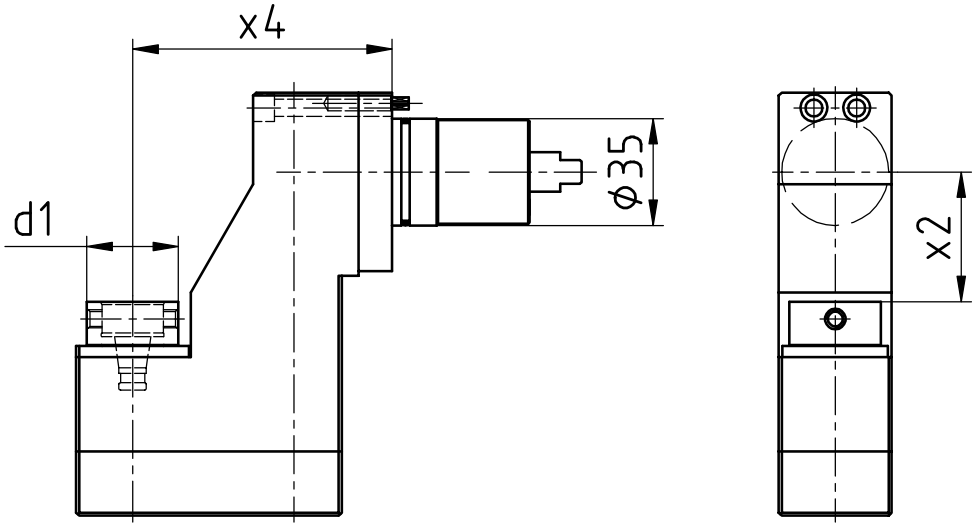


| [mm] | [mm] | [mm] | Spindle<br>Broche | [Nm] | [rpm] | | Outside cooling<br>Lubrificat. ext. | Internal cooling<br>Lubrificat. cent. | [bar] | Order no.<br>Nº de Code |
|---|---|---|---|---|---|---|---|---|---|---|
| **d1** | **x2** | **x4** | **Spindel** | **T max** | **n max** | **i** | **Aussenkühlung** | **Innenkühlung** | **p** | **Bestellnummer** |
| 30 | 42,5 | 85 | WFB 20-12 | 10 | 8.000 | 1:1 | | | | MPU.Z35.B20.RA0.TS |

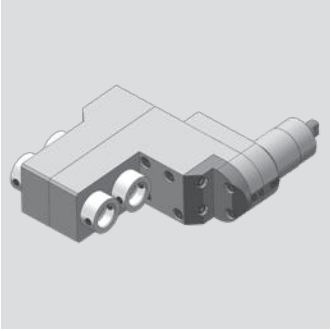

# Tsugami

**Radial Bohr- und Fräskopf**
Radial drilling and milling head
Outil de perçage et de fraisage radiale

**WG 35**

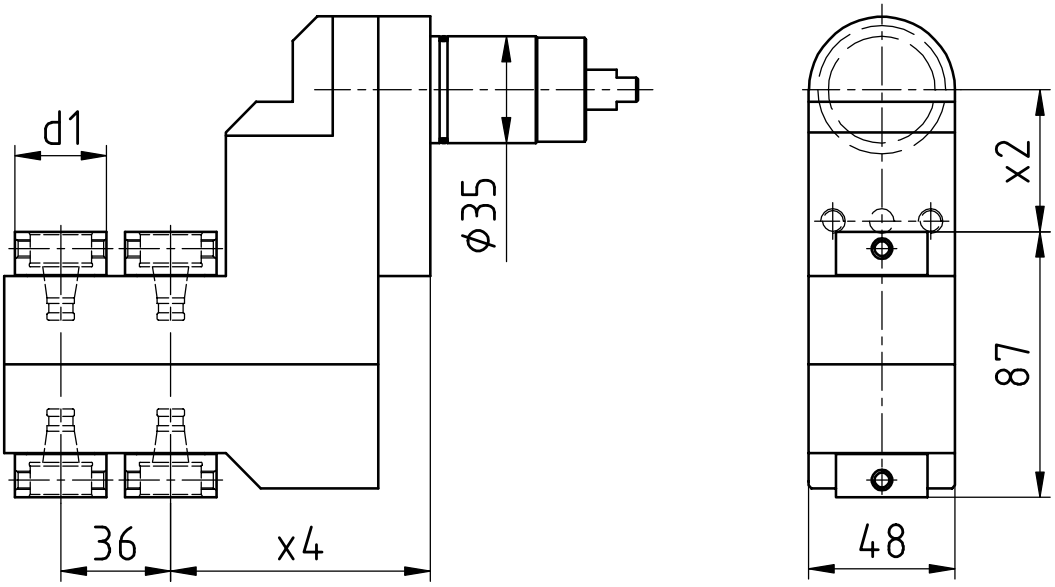


| [mm] | [mm] | [mm] | Spindle<br>Broche | [Nm] | [rpm] | | Outside cooling<br>Lubrificat. ext. | Internal cooling<br>Lubrificat. cent. | [bar] | Order no.<br>Nº de Code |
|---|---|---|---|---|---|---|---|---|---|---|
| **d1** | **x2** | **x4** | **Spindel** | **T max** | **n max** | **i** | **Aussenkühlung** | **Innenkühlung** | **p** | **Bestellnummer** |
| 30 | 46,5 | 85 | WFB 20-12 | 3 | 8.000 | 1:1 | | | | MPU.Z35.B20.4A0.TS |

# Tsugami

**Radial Bohr- und Fräskopf**
Radial drilling and milling head
Outil de perçage et de fraisage radiale

**WG 35**

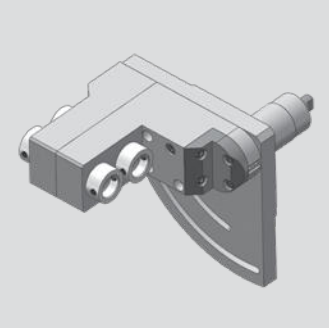

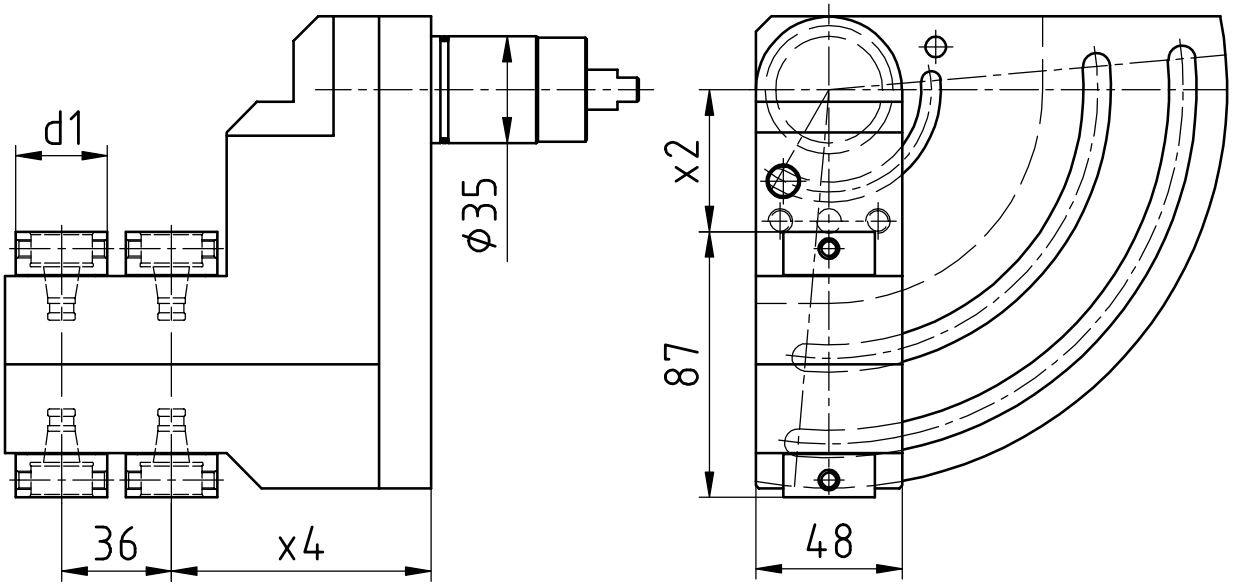


| [mm] | [mm] | [mm] | Spindle<br>Broche | [Nm] | [rpm] | | Outside cooling<br>Lubrificat. ext. | Internal cooling<br>Lubrificat. cent. | [bar] | Order no.<br>Nº de Code |
|---|---|---|---|---|---|---|---|---|---|---|
| **d1** | **x2** | **x4** | **Spindel** | **T max** | **n max** | **i** | **Aussenkühlung** | **Innenkühlung** | **p** | **Bestellnummer** |
| 30 | 46,5 | 85 | WFB 20-12 | 3 | 8.000 | 1:1 | | | | MPU.Z35.B20.4S0.TS |

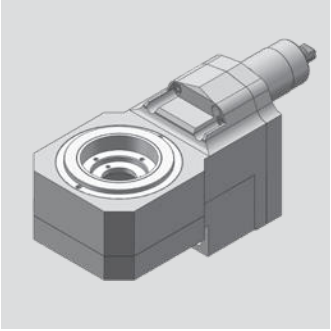

# Tsugami

**Gewindewirbelapparat**
Thread whirling unit
Unité de tourbillonnement

**WG 35**

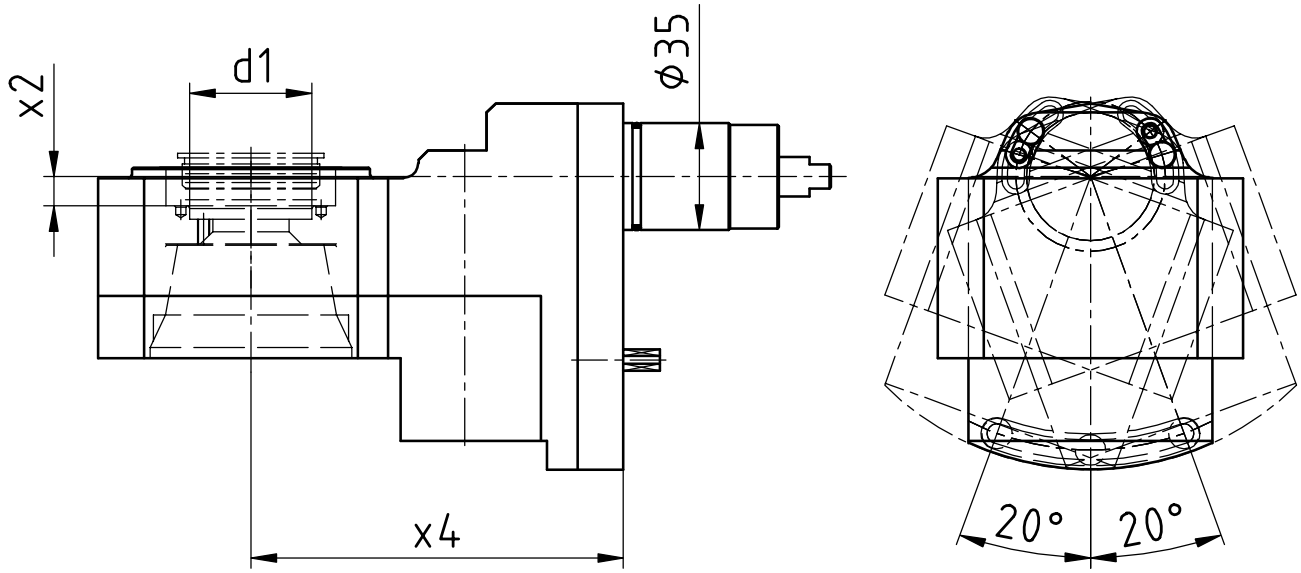


| [mm] | [mm] | [mm] | Spindle<br>Broche | [Nm] | [rpm] | | Outside cooling<br>Lubrificat. ext. | Internal cooling<br>Lubrificat. cent. | [bar] | Order no.<br>Nº de Code |
|---|---|---|---|---|---|---|---|---|---|---|
| **d1** | **x2** | **x4** | **Spindel** | **T max** | **n max** | **i** | **Aussenkühlung** | **Innenkühlung** | **p** | **Bestellnummer** |
| 40 | 9,5 | 122 | MONO | 16 | 6.932 | 1,154:1 | x | | | MPU.Z35.0800.TS |

# Tsugami

**Gewindewirbelapparat modular**
Thread whirling unit
Unité de tourbillonnement

**WG 35**

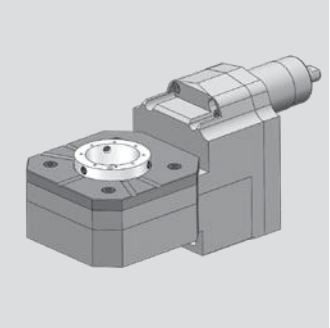

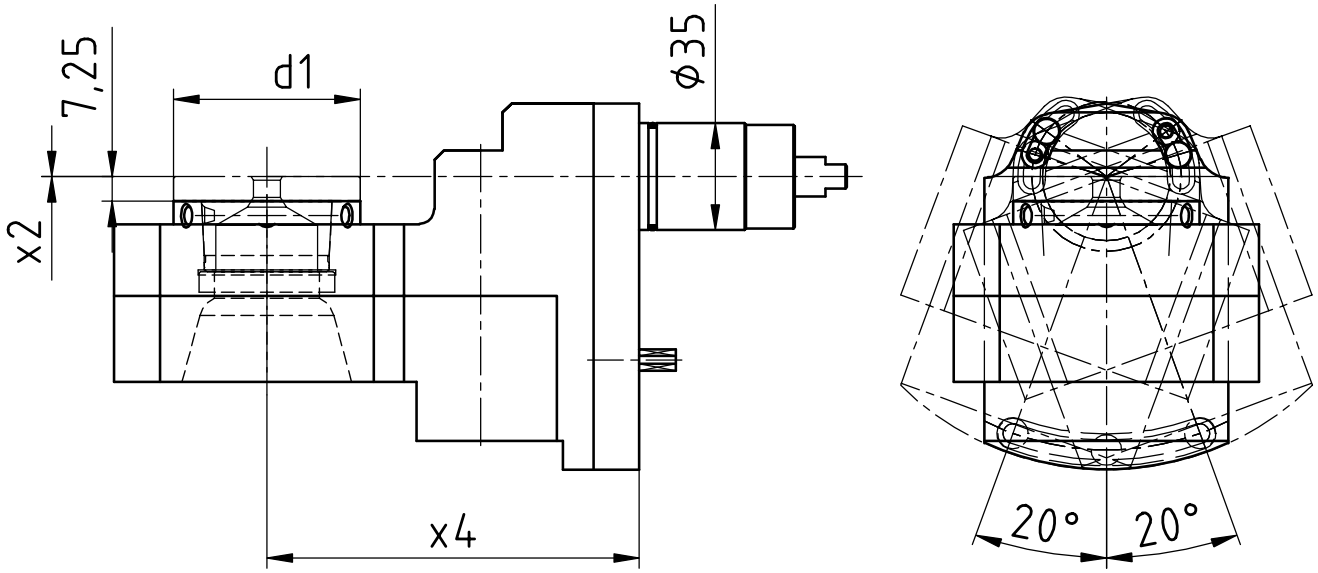


| [mm] | [mm] | [mm] | Spindle<br>Broche | [Nm] | [rpm] | | Outside cooling<br>Lubrificat. ext. | Internal cooling<br>Lubrificat. cent. | [bar] | Order no.<br>Nº de Code |
|---|---|---|---|---|---|---|---|---|---|---|
| **d1** | **x2** | **x4** | **Spindel** | **T max** | **n max** | **i** | **Aussenkühlung** | **Innenkühlung** | **p** | **Bestellnummer** |
| 54 | 0 | 122 | WFW 50 | 16 | 6.932 | 1,154:1 | x | | | MPU.Z35.M0800.TS |

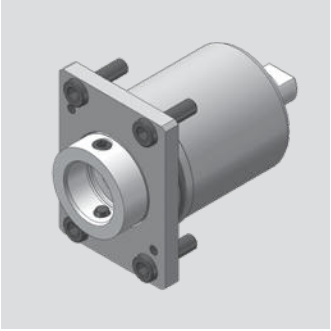

# Tsugami

**Axial Bohr- und Fräskopf**
Axial drilling and milling head
Outil de perçage et de fraisage axiale

**WG 35**

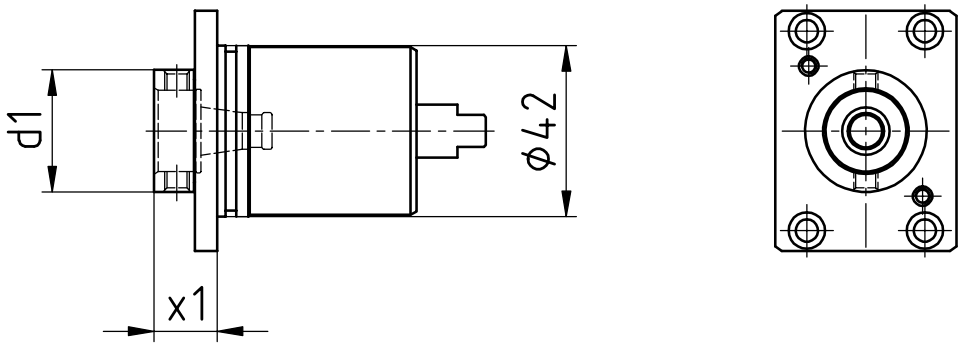


| [mm] | [mm] | Spindle<br>Broche | [Nm] | [rpm] | | Outside cooling<br>Lubrificat. ext. | Internal cooling<br>Lubrificat. cent. | [bar] | Order no.<br>Nº de Code |
|---|---|---|---|---|---|---|---|---|---|
| **d1** | **x1** | **Spindel** | **T max** | **n max** | **i** | **Aussenkühlung** | **Innenkühlung** | **p** | **Bestellnummer** |
| 30 | 15,5 | WFB 20-12 | 10 | 8.000 | 1:1 | | | | MPU.Z42.B20.AA0.TS.R |

# Tsugami

**Axial Bohr- und Fräskopf**
Axial drilling and milling head
Outil de perçage et de fraisage axiale

**WG 35**

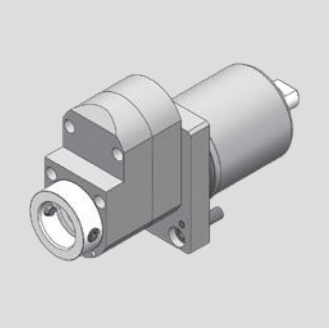

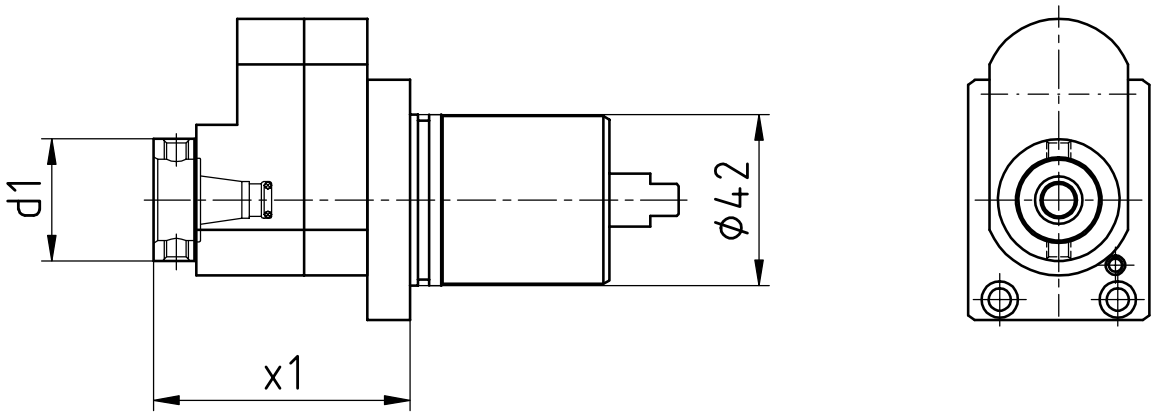


| [mm] | [mm] | Spindle<br>Broche | [Nm] | [rpm] | | Outside cooling<br>Lubrificat. ext. | Internal cooling<br>Lubrificat. cent. | [bar] | Order no.<br>Nº de Code |
|---|---|---|---|---|---|---|---|---|---|
| **d1** | **x1** | **Spindel** | **T max** | **n max** | **i** | **Aussenkühlung** | **Innenkühlung** | **p** | **Bestellnummer** |
| 30 | 63 | WFB 20-12 | 3 | 24.000 | 1:3 | | | | MPU.Z42.B20.BA0.TS.R |

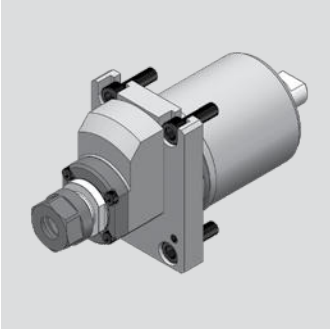

# Tsugami

**Axial Bohr- und Fräskopf**
Axial drilling and milling head
Outil de perçage et de fraisage axiale

**WG 35**

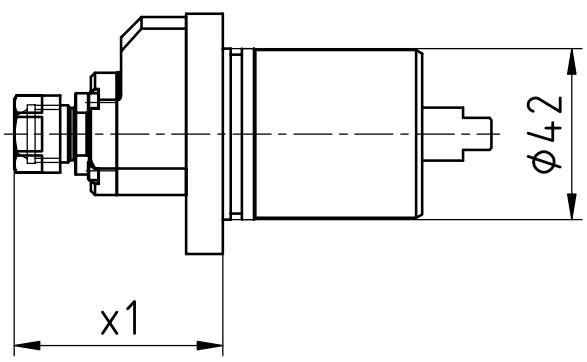


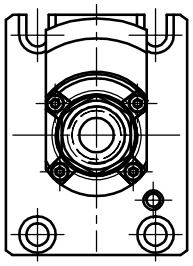

| [mm] | [mm] | Spindle<br>Broche | [Nm] | [rpm] | | Outside cooling<br>Lubrificat. ext. | Internal cooling<br>Lubrificat. cent. | [bar] | Order no.<br>Nº de Code |
|---|---|---|---|---|---|---|---|---|---|
| **d1** | **x1** | **Spindel** | **T max** | **n max** | **i** | **Aussenkühlung** | **Innenkühlung** | **p** | **Bestellnummer** |
| 19 | 51,2 | ER11 | 2 | 32.000 | 1:4 | | | | MPU.Z42.E11.BA0.TSR.I4 |

# Tsugami

**Axial Bohr- und Fräskopf**
Axial drilling and milling head
Outil de perçage et de fraisage axiale

**WG 35**

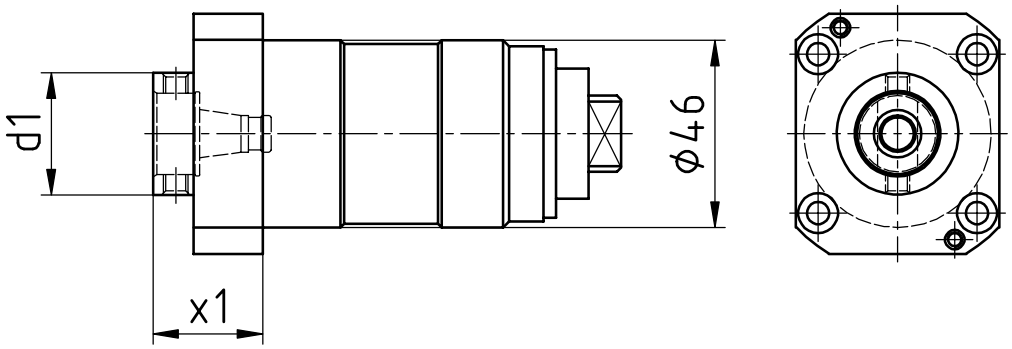


| [mm] | [mm] | Spindle | [Nm] | [rpm] | | Outside cooling | Internal cooling | [bar] | Order no. |
|---|---|---|---|---|---|---|---|---|---|
| | | Broche | | | | Lubrificat. ext. | Lubrificat. cent. | | Nº de Code |
| **d1** | **x1** | **Spindel** | **T max** | **n max** | **i** | **Aussenkühlung** | **Innenkühlung** | **p** | **Bestellnummer** |
| 30 | 27 | WFB 20-12 | 10 | 8.000 | 1:1 | | | | MPU.Z46.B20.AA0.TS |

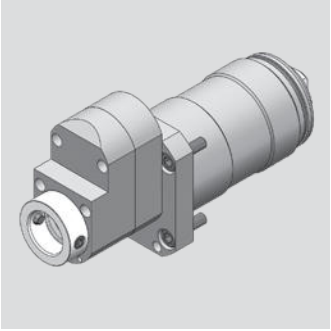

# Tsugami

**Axial Bohr- und Fräskopf**
Axial drilling and milling head
Outil de perçage et de fraisage axiale

**WG 35**

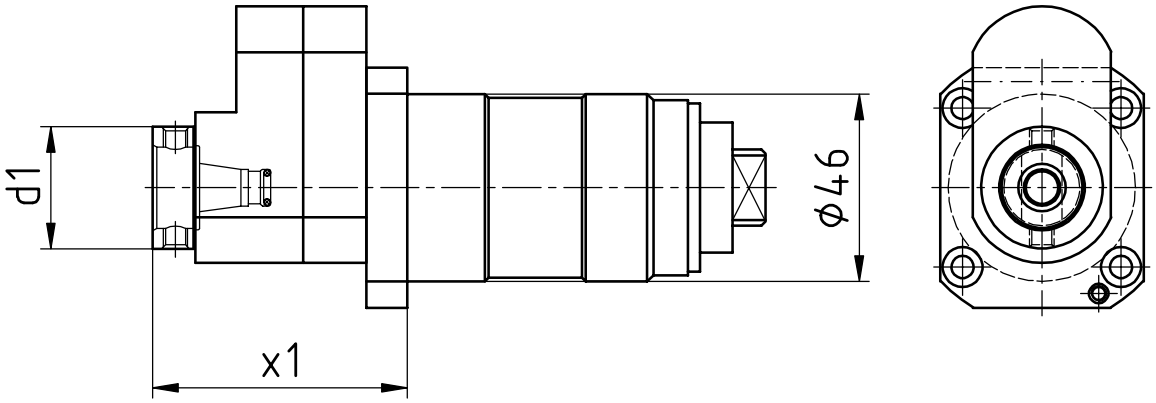


| [mm] | [mm] | Spindle<br>Broche | [Nm] | [rpm] | | Outside cooling<br>Lubrificat. ext. | Internal cooling<br>Lubrificat. cent. | [bar] | Order no.<br>Nº de Code |
|---|---|---|---|---|---|---|---|---|---|
| **d1** | **x1** | **Spindel** | **T max** | **n max** | **i** | **Aussenkühlung** | **Innenkühlung** | **p** | **Bestellnummer** |
| 30 | 62,5 | WFB 20-12 | 3 | 24.000 | 1:3 | | | | MPU.Z46.B20.BA0.TS |

# Tsugami

**Axial Bohr- und Fräskopf**
Axial drilling and milling head
Outil de perçage et de fraisage axiale

**WG 35**

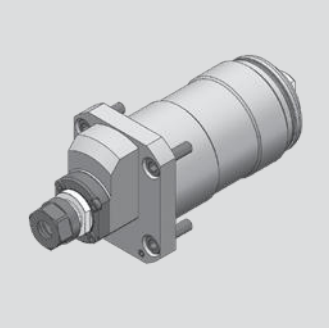

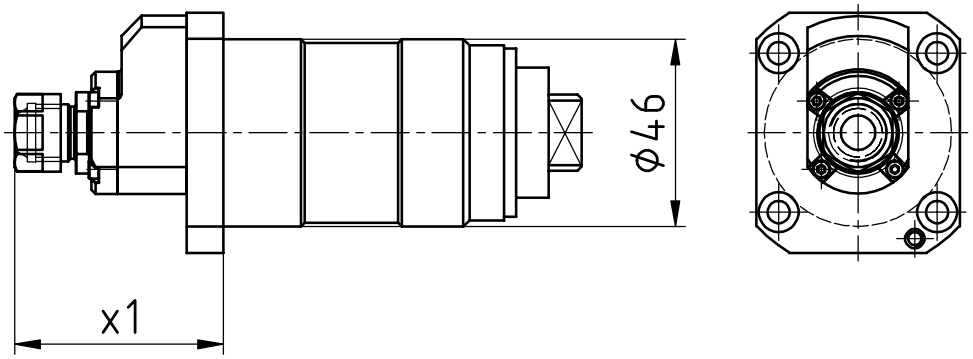


| [mm] | [mm] | Spindle | [Nm] | [rpm] | | Outside cooling | Internal cooling | [bar] | Order no. |
|---|---|---|---|---|---|---|---|---|---|
| | | Broche | | | | Lubrificat. ext. | Lubrificat. cent. | | Nº de Code |
| **d1** | **x1** | **Spindel** | **T max** | **n max** | **i** | **Aussenkühlung** | **Innenkühlung** | **p** | **Bestellnummer** |
| 19 | 51,2 | ER11 | 2 | 32.000 | 1:4 | | | | MPU.Z46.E11.BA0.TS.I4 |

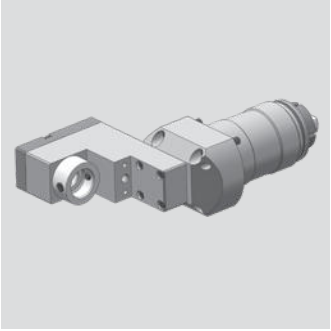

# Tsugami

**Radial Bohr- und Fräskopf**
Radial drilling and milling head
Outil de perçage et de fraisage radiale

**WG 35**

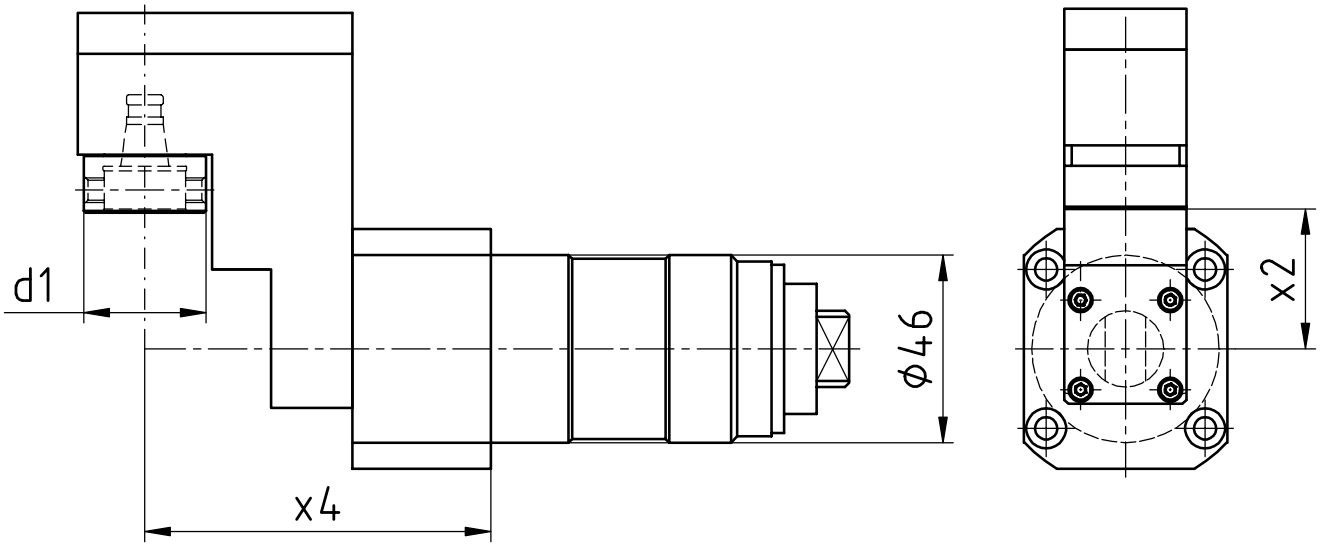


| [mm] | [mm] | [mm] | Spindle<br>Broche | [Nm] | [rpm] | | Outside cooling<br>Lubrificat. ext. | Internal cooling<br>Lubrificat. cent. | [bar] | Order no.<br>Nº de Code |
|---|---|---|---|---|---|---|---|---|---|---|
| **d1** | **x2** | **x4** | **Spindel** | **T max** | **n max** | **i** | **Aussenkühlung** | **Innenkühlung** | **p** | **Bestellnummer** |
| 30 | 34,4 | 85 | ER11 | 10 | 8.000 | 1:1 | | | | MPU.Z46.B20.RA0.TS |

# Tsugami

**Radial Bohr- und Fräskopf**
Radial drilling and milling head
Outil de perçage et de fraisage radiale

**WG 35**

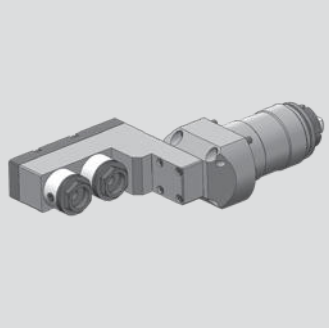

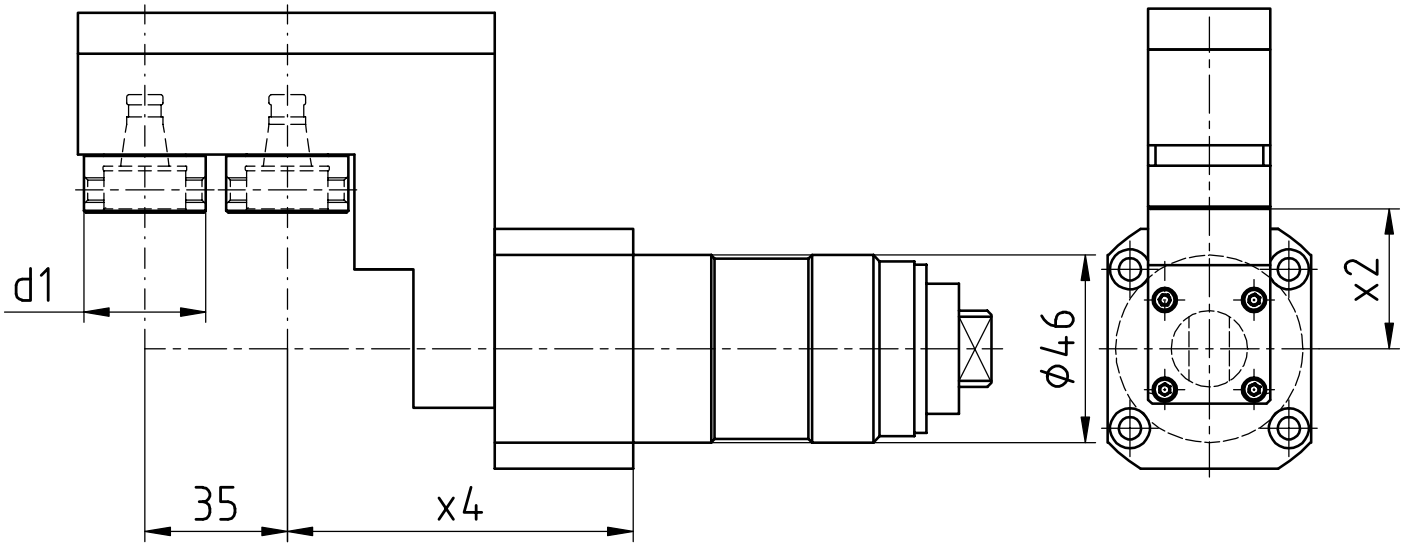


| [mm] | [mm] | [mm] | Spindle<br>Broche | [Nm] | [rpm] | | Outside cooling<br>Lubrificat. ext. | Internal cooling<br>Lubrificat. cent. | [bar] | Order no.<br>Nº de Code |
|---|---|---|---|---|---|---|---|---|---|---|
| **d1** | **x2** | **x4** | **Spindel** | **T max** | **n max** | **i** | **Aussenkühlung** | **Innenkühlung** | **p** | **Bestellnummer** |
| 30 | 34,4 | 85 | ER11 | 10 | 8.000 | 1:1 | | | | MPU.Z46.B20.2A0.TS |

Modulare Aggregatetechnik

# Statische Halter

**Katalog WF-02**

# WFB-Adapterpool

Indications for the customer

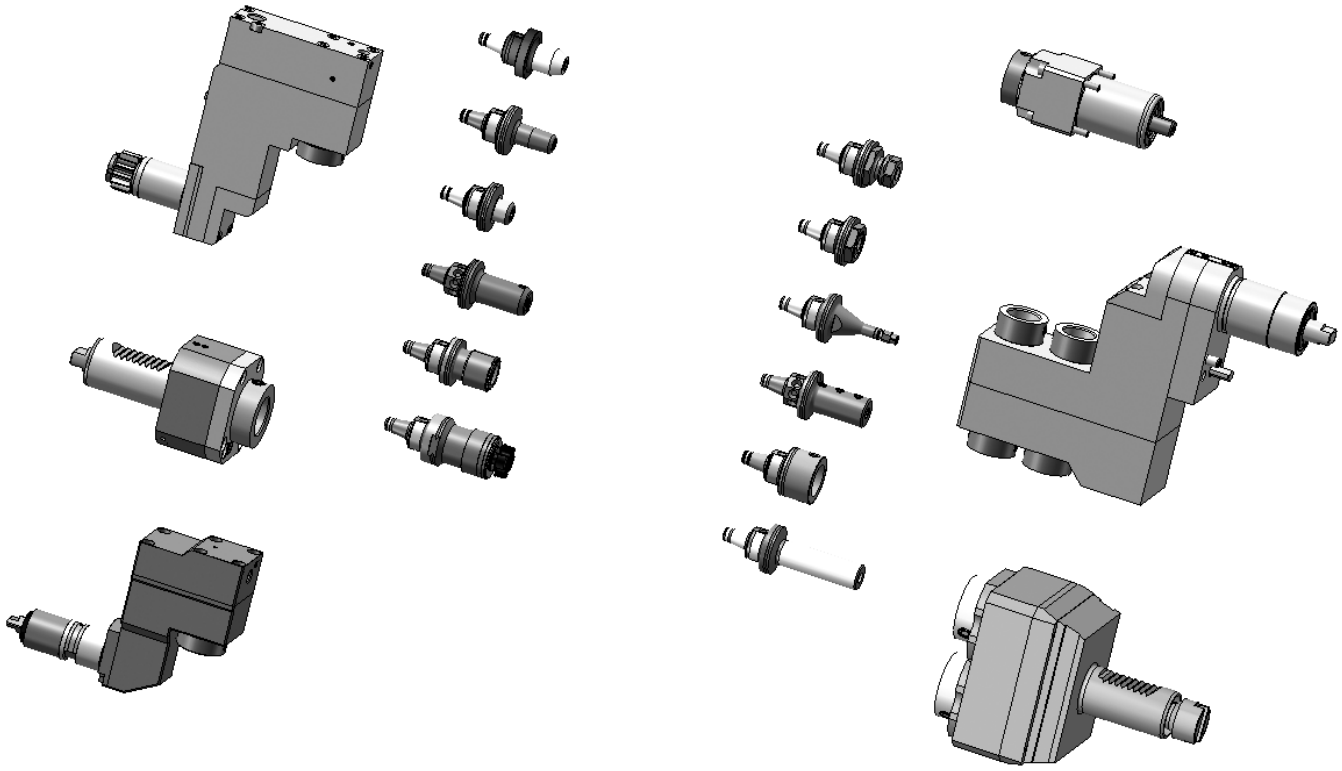

**Mit den Werkzeughaltern von W&F in statischer oder angetriebener Ausführung und dem WFB-Adaptersystem haben Sie die einzigartige Möglichkeit, für sämtliche Hersteller egal ob im Kurzdrehen, Langdrehen oder Mehrspindeldrehen ein durchgängiges modulares Werkzeugsystem einzusetzen.**

The W&F tool holders are in static or driven performance and beyond that, the WFB-adapter system offers you an unique option to use it for every machine manufacturer whether you are manufacturer producing with swiss type lathes, standard turning machines or multispindle turning machines, WFB is suitable.

# WFB-Grundhalter (Typ WFE)

**Modulare Rundschaftaufnahmen**
Round shank modular
Enregistrement rond modulaire

**WG 35**

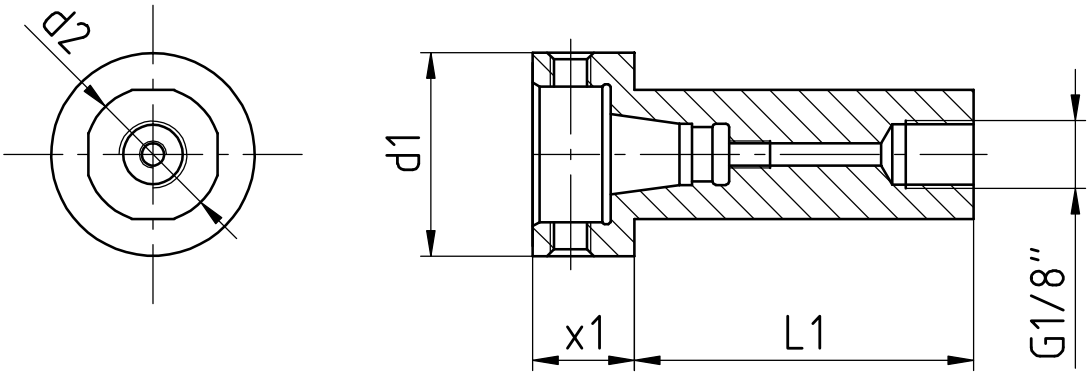


| [mm] | [mm] | [mm] | [mm] | Spindle<br>Broche | [Nm] | [rpm] | | shank-type<br>Type | Internal cooling<br>Lubrificat. cent. | [bar] | Order no.<br>Nº de Code |
|---|---|---|---|---|---|---|---|---|---|---|---|
| **d1** | **x2** | **x1** | **L1** | **Spindel** | **T max** | **n max** | **i** | **Schaft-Typ** | **Innenkühlung** | **p** | **Bestellnummer** |
| 30 | 19,05 | 15 | 60 | WFB 20-12 | | | | B | x | | WFE.B20.019.060 |
| 30 | 20 | 15 | 30 | WFB 20-12 | | | | B | x | | WFE.B20.020.015.030 |
| 30 | 20 | 15 | 50 | WFB 20-12 | | | | B | x | | WFE.B20.020.015.050 |
| 30 | 20 | 14,5 | 110 | WFB 20-12 | | | | A | x | | WFE.B20.020.110 |
| 30 | 20 | 15 | 135 | WFB 20-12 | | | | A | x | | WFE.B20.020.135 |
| 30 | 22 | 15 | 60 | WFB 20-12 | | | | B | x | | WFE.B20.022.060 |
| 30 | 25 | 15 | 60 | WFB 20-12 | | | | B | x | | WFE.B20.025.060 |
| 30 | 25 | 15 | 130 | WFB 20-12 | | | | A | x | | WFE.B20.025.130 |
| 30 | 25 | 15 | 135 | WFB 20-12 | | | | A | x | | WFE.B20.025.135 |
| 30 | 25 | 15 | 200 | WFB 20-12 | | | | B | x | | WFE.B20.025.200 |
| 30 | 25,4 | 15 | 50 | WFB 20-12 | | | | B | x | | WFE.B20.0254.050 |
| 33 | 32 | 13 | 50 | WFB 20-12 | | | | B | x | | WFE.B20.032.013 |

| | |
|---|---|
| **Schaft-Typ**<br>shank-type<br>type | A: vollrund/full round/pleine ronde<br>B: mit Spannflächen/with clamping surfaces/avec des surfaces de serrage |

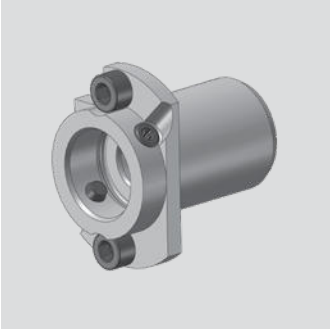

# Citizen

**Modularer Basishalter**
modular basic holder
Support de base modulaire

**WG 35**

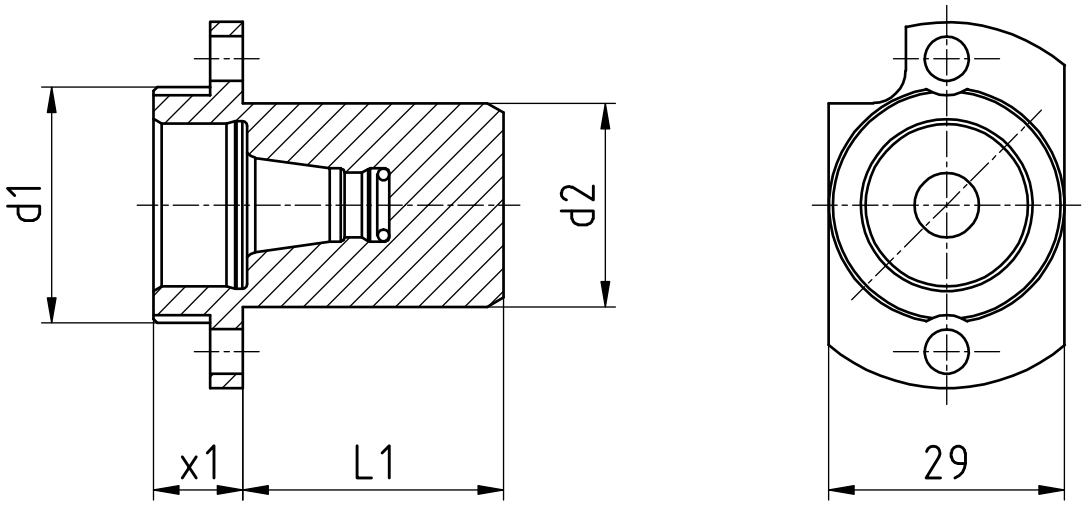


| [mm] | [mm] | [mm] | [mm] | Spindle<br>Broche | [Nm] | [rpm] | | Outside cooling<br>Lubrificat. ext. | Internal cooling<br>Lubrificat. cent. | [bar] | Order no.<br>Nº de Code |
|---|---|---|---|---|---|---|---|---|---|---|---|
| **d1** | **d2** | **x1** | **L1** | **Spindel** | **T max** | **n max** | **i** | **Aussenkühlung** | **Innenkühlung** | **p** | **Bestellnummer** |
| 29 | 25 | 11 | 32 | WFB 20-12 | | | | | | | WFB.020.SHT.Z25.MSC507 |

# Hanwha

**Modularer Basishalter**
modular basic holder
Support de base modulaire

**WG 35**

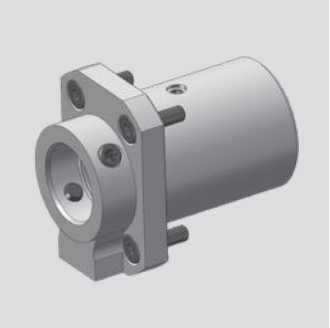

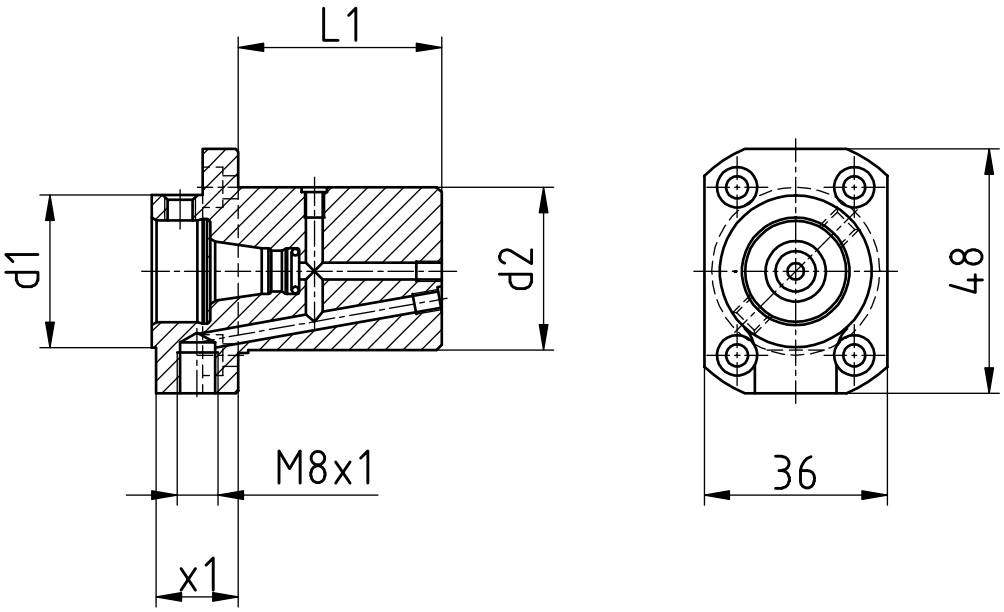


| [mm] | [mm] | [mm] | [mm] | Spindle<br>Broche | [Nm] | [rpm] | | Outside cooling<br>Lubrificat. ext. | Internal cooling<br>Lubrificat. cent. | [bar] | Order no.<br>Nº de Code |
|---|---|---|---|---|---|---|---|---|---|---|---|
| **d1** | **d2** | **x1** | **L1** | **Spindel** | **T max** | **n max** | **i** | **Aussenkühlung** | **Innenkühlung** | **p** | **Bestellnummer** |
| 30 | 33 | 16 | 40 | WFB 20-12 | | | | x | x | | WFB.020.SHT.XD20.001 |

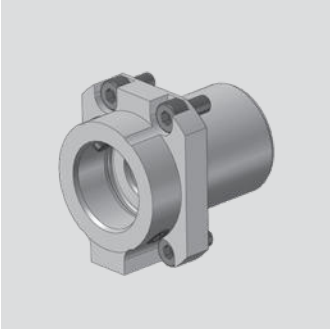

# Hanwha

**Modularer Basishalter**
modular basic holder
Support de base modulaire

**WG 35**

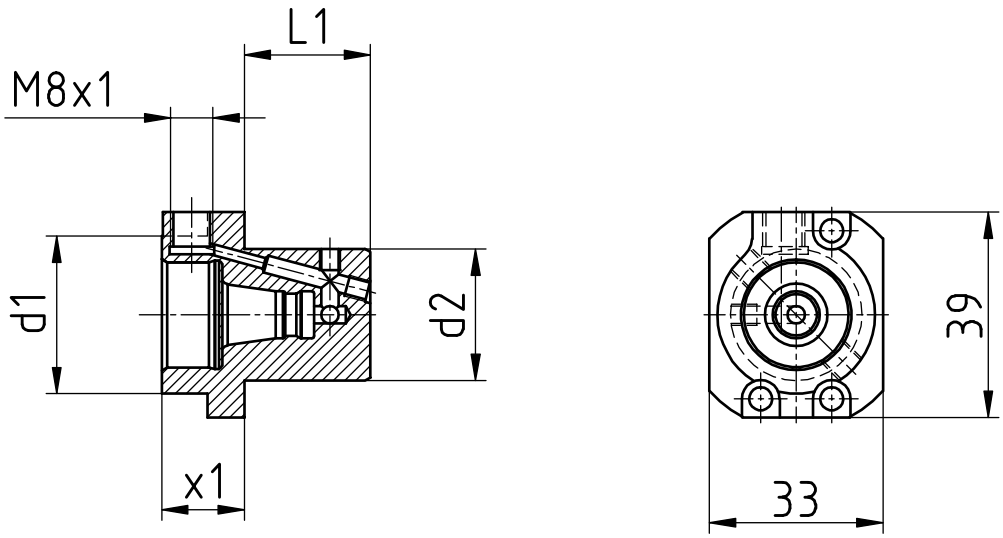


| [mm] | [mm] | [mm] | [mm] | Spindle<br>Broche | [Nm] | [rpm] | | Outside cooling<br>Lubrificat. ext. | Internal cooling<br>Lubrificat. cent. | [bar] | Order no.<br>Nº de Code |
|---|---|---|---|---|---|---|---|---|---|---|---|
| **d1** | **d2** | **x1** | **L1** | **Spindel** | **T max** | **n max** | **i** | **Aussenkühlung** | **Innenkühlung** | **p** | **Bestellnummer** |
| 30 | 25 | 15,7 | 24 | WFB 20-12 | | | | x | x | | WFB.020.SHT.XE20.R |

# Hanwha

**Modularer Basishalter (Y-Versatz ausgleichbar)**
modular basic holder (Y offset compensated)
Support de base modulaire (Y décalage)

**WG 35**

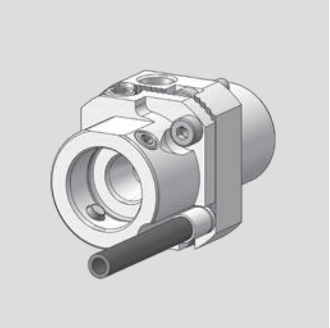

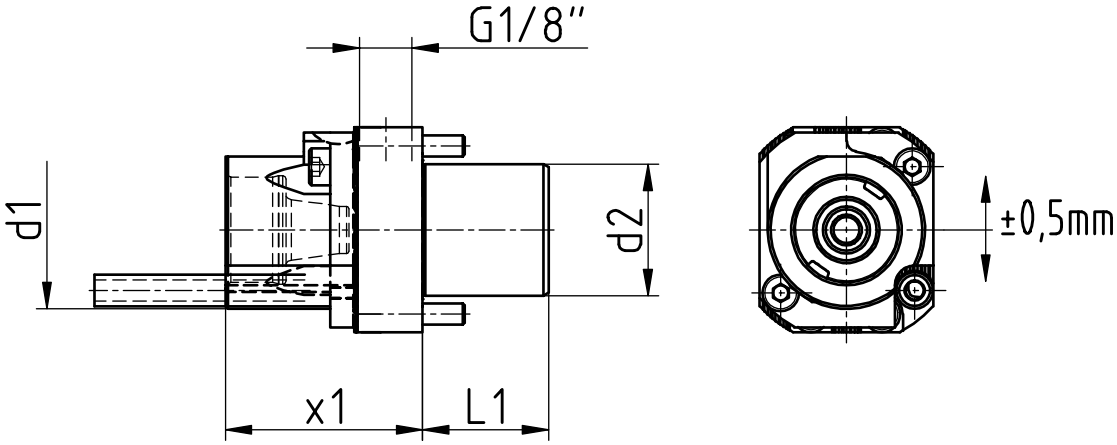


| [mm] | [mm] | [mm] | [mm] | Spindle<br>Broche | [Nm] | [rpm] | | Outside cooling<br>Lubrificat. ext. | Internal cooling<br>Lubrificat. cent. | [bar] | Order no.<br>Nº de Code |
|---|---|---|---|---|---|---|---|---|---|---|---|
| **d1** | **d2** | **x1** | **L1** | **Spindel** | **T max** | **n max** | **i** | **Aussenkühlung** | **Innenkühlung** | **p** | **Bestellnummer** |
| 30 | 25 | 15,7 | 24 | WFB 20-12 | | | | x | x | | WFB.020.SHT.XE20.R |

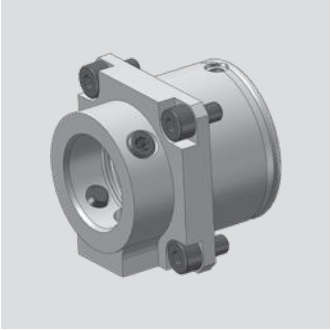

# Maier

**Modularer Basishalter**
modular basic holder
Support de base modulaire

**WG 35**

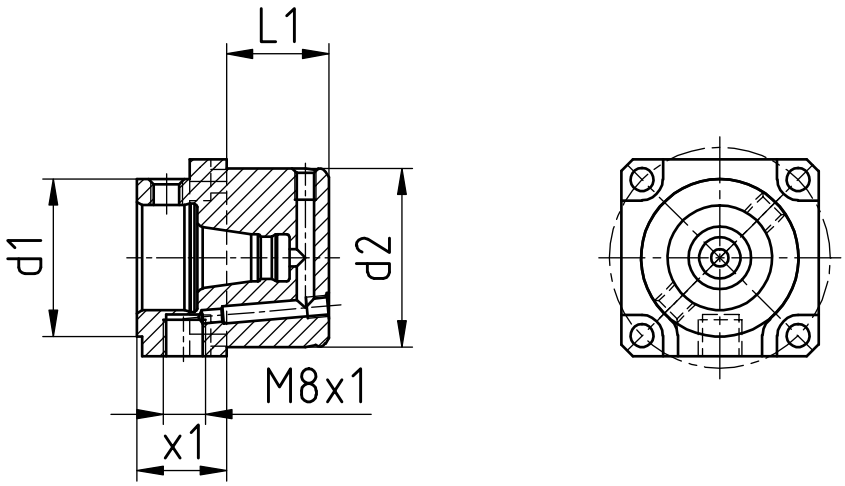


| [mm] | [mm] | [mm] | [mm] | Spindle<br>Broche | [Nm] | [rpm] | | Outside cooling<br>Lubrificat. ext. | Internal cooling<br>Lubrificat. cent. | [bar] | Order no.<br>Nº de Code |
|---|---|---|---|---|---|---|---|---|---|---|---|
| **d1** | **d2** | **x1** | **L1** | **Spindel** | **T max** | **n max** | **i** | **Aussenkühlung** | **Innenkühlung** | **p** | **Bestellnummer** |
| 30 | 34 | 17 | 19,5 | WFB 20-12 | | | | x | x | | WFB.020.SHT.Z34.019,5 |

# Star

**Modularer Basishalter (Y-Versatz ausgleichbar)**
modular basic holder (Y offset compensated)“
Support de base modulaire (Y décalage)

**WG 35**

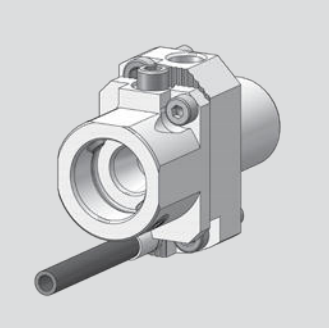

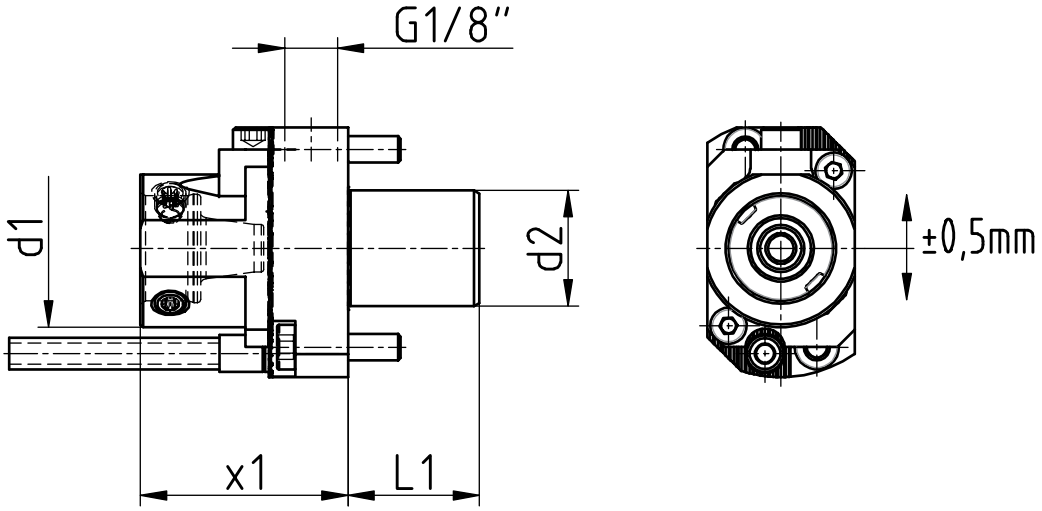


| [mm] | [mm] | [mm] | [mm] | Spindle<br>Broche | [Nm] | [rpm] | | Outside cooling<br>Lubrificat. ext. | Internal cooling<br>Lubrificat. cent. | [bar] | Order no.<br>Nº de Code |
|---|---|---|---|---|---|---|---|---|---|---|---|
| **d1** | **d2** | **x1** | **L1** | **Spindel** | **T max** | **n max** | **i** | **Aussenkühlung** | **Innenkühlung** | **p** | **Bestellnummer** |
| 30 | 22 | 39,5 | 25 | WFB-20-12 | | | | x | x | | WFB.020.SHT.541-61-00 |

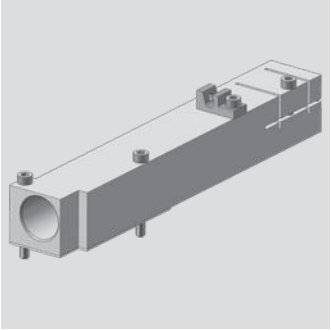

# Tornos EvoDECO 10

**Basishalter**
basic holder
Support de base

**WG 35**

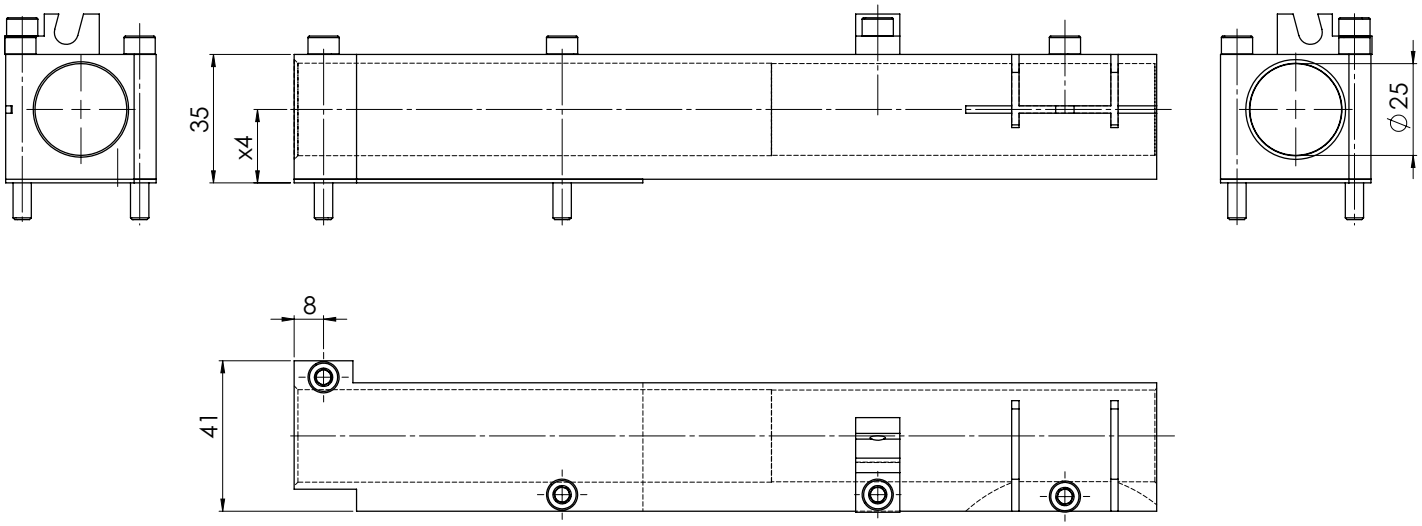


| [mm] | Spindle<br>Broche | [Nm] | [rpm] | | Outside cooling<br>Lubrificat. ext. | Internal cooling<br>Lubrificat. cent. | [bar] | Order no.<br>Nº de Code |
|---|---|---|---|---|---|---|---|---|
| **x4** | **Spindel** | **T max** | **n max** | **i** | **Aussenkühlung** | **Innenkühlung** | **p** | **Bestellnummer** |
| 20 | | | | | | | | WFE.025.H20.DE10 |

# Tornos EvoDECO 13

**Basishalter**
basic holder
Support de base

**WG 35**

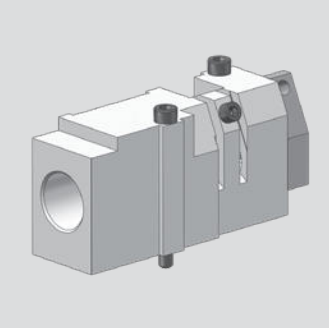

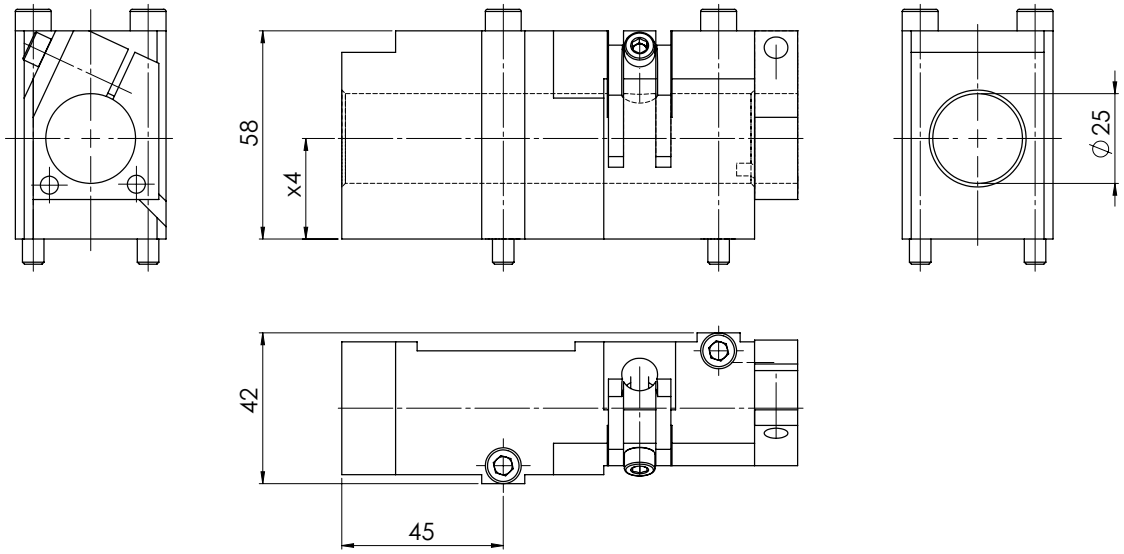


| [mm] | Spindle<br>Broche | [Nm] | [rpm] | | Outside cooling<br>Lubrificat. ext. | Internal cooling<br>Lubrificat. cent. | [bar] | Order no.<br>Nº de Code |
|---|---|---|---|---|---|---|---|---|
| **x4** | **Spindel** | **T max** | **n max** | **i** | **Aussenkühlung** | **Innenkühlung** | **p** | **Bestellnummer** |
| 28 | | | | | | | | WFE.025.H28.DE13 |

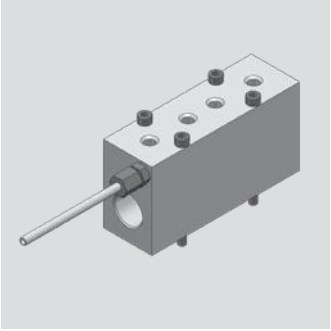

# Tornos EvoDECO 20

**Basishalter**
basic holder
Support de base

**WG 35**

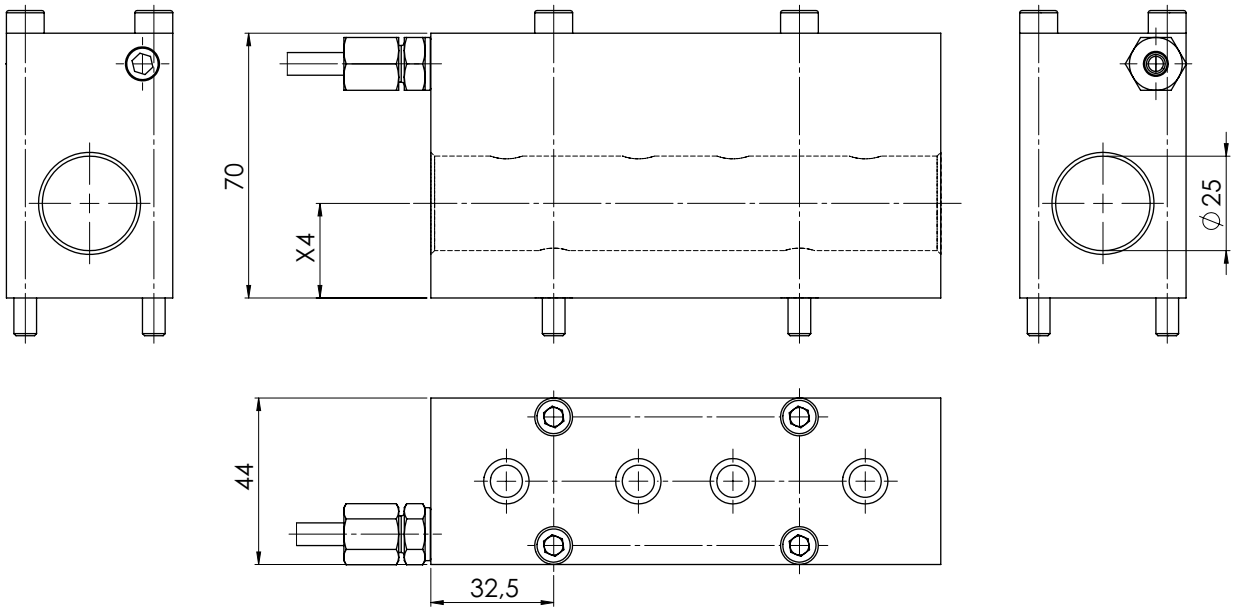


| [mm] | Spindle<br>Broche | [Nm] | [rpm] | | Outside cooling<br>Lubrificat. ext. | Internal cooling<br>Lubrificat. cent. | [bar] | Order no.<br>Nº de Code |
|---|---|---|---|---|---|---|---|---|
| **x4** | **Spindel** | **T max** | **n max** | **i** | **Aussenkühlung** | **Innenkühlung** | **p** | **Bestellnummer** |
| 25 | | | | | | | | WFE.025.H25.DE20 |

# Tornos Swiss Baureihe

**Modularer Basishalter (Y-Versatz ausgleichbar)**
modular basic holder (Y offset compensated)
Support de base modulaire (Y décalage)

**WG 35**

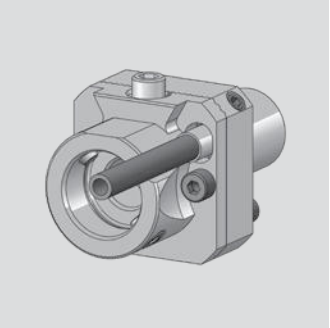

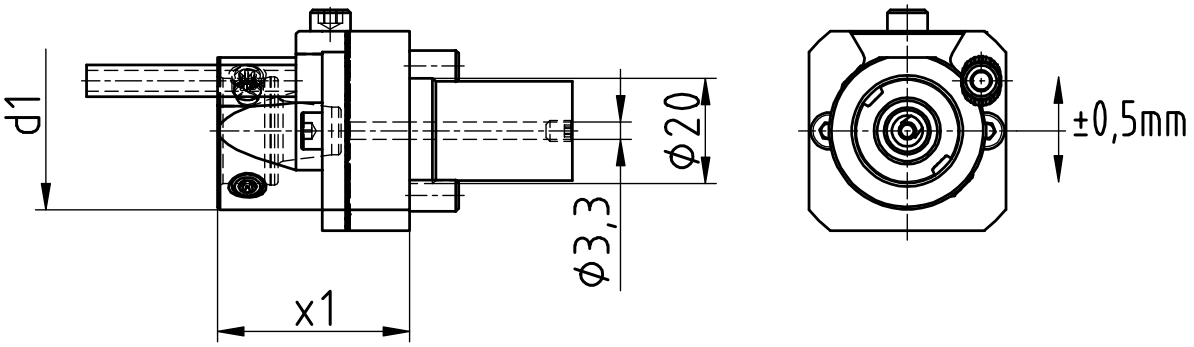


| [mm] | [mm] | [mm] | [mm] | Spindle<br>Broche | [Nm] | [rpm] | | Outside cooling<br>Lubrificat. ext. | Internal cooling<br>Lubrificat. cent. | [bar] | Order no.<br>Nº de Code |
|---|---|---|---|---|---|---|---|---|---|---|---|
| **d1** | **d2** | **x1** | **L1** | **Spindel** | **T max** | **n max** | **i** | **Aussenkühlung** | **Innenkühlung** | **p** | **Bestellnummer** |
| 30 | 20 | 36,5 | 31 | WFB 20-12 | | | | x | x | | WFB.020.SHT.DGST.R |

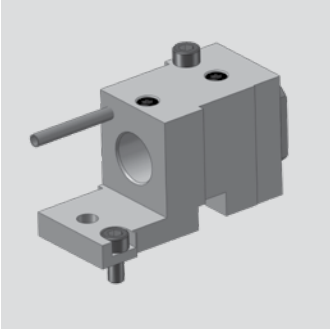

# Tornos Swiss Baureihe

**Modularer Basishalter**
modular basic holder
Support de base modulaire

**WG 35**

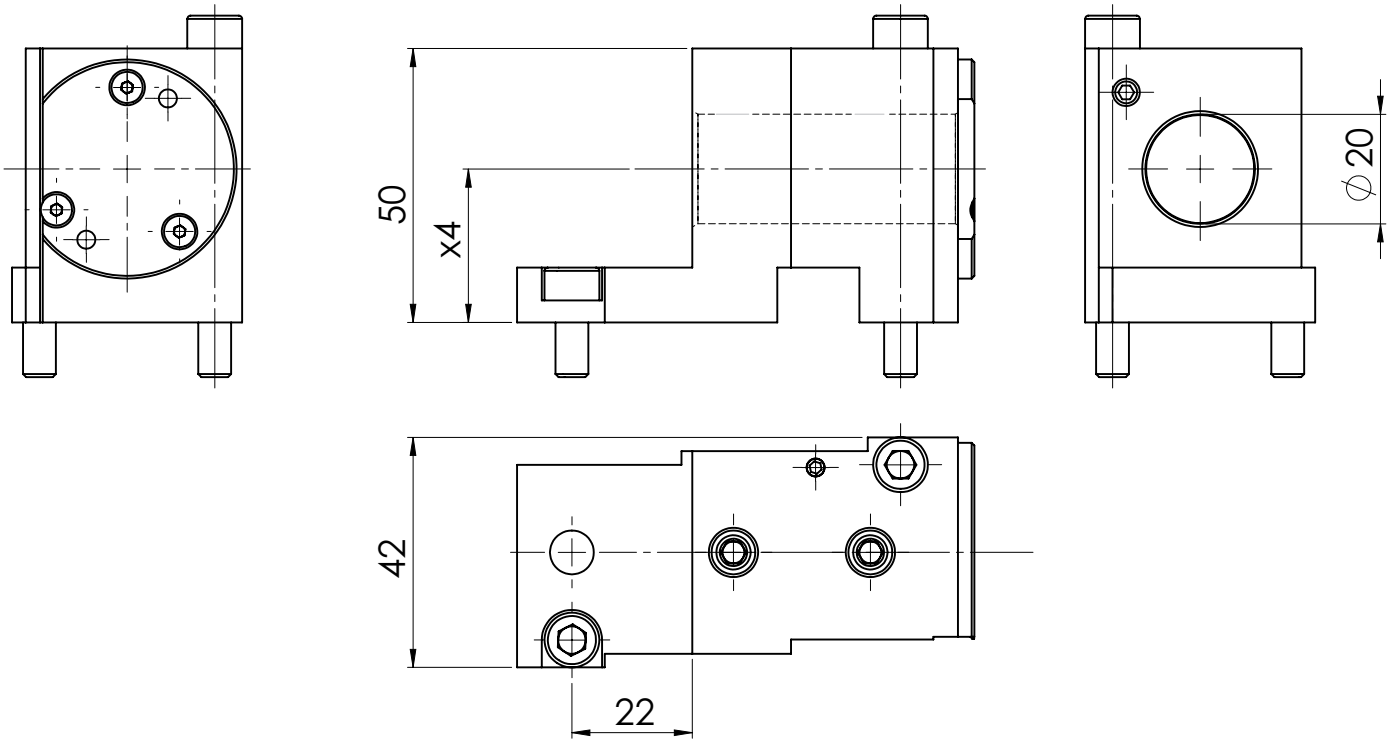


| [mm] | Spindle<br>Broche | [Nm] | [rpm] | | Outside cooling<br>Lubrificat. ext. | Internal cooling<br>Lubrificat. cent. | [bar] | Order no.<br>Nº de Code |
|---|---|---|---|---|---|---|---|---|
| **x4** | **Spindel** | **T max** | **n max** | **i** | **Aussenkühlung** | **Innenkühlung** | **p** | **Bestellnummer** |
| 28 | | | | | x | x | | WFE.020.H28.DGST |

**Passende Rundschaftaufnahmen siehe Seite 9.1**
matching round shanks see page 9.1

# Tornos Swiss Baureihe

**Modularer Basishalter**
modular basic holder
Support de base modulaire

**WG 35**

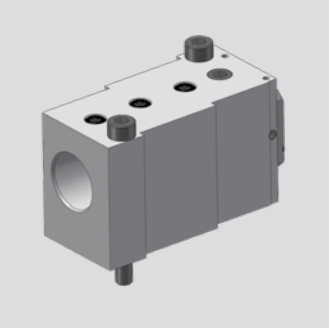

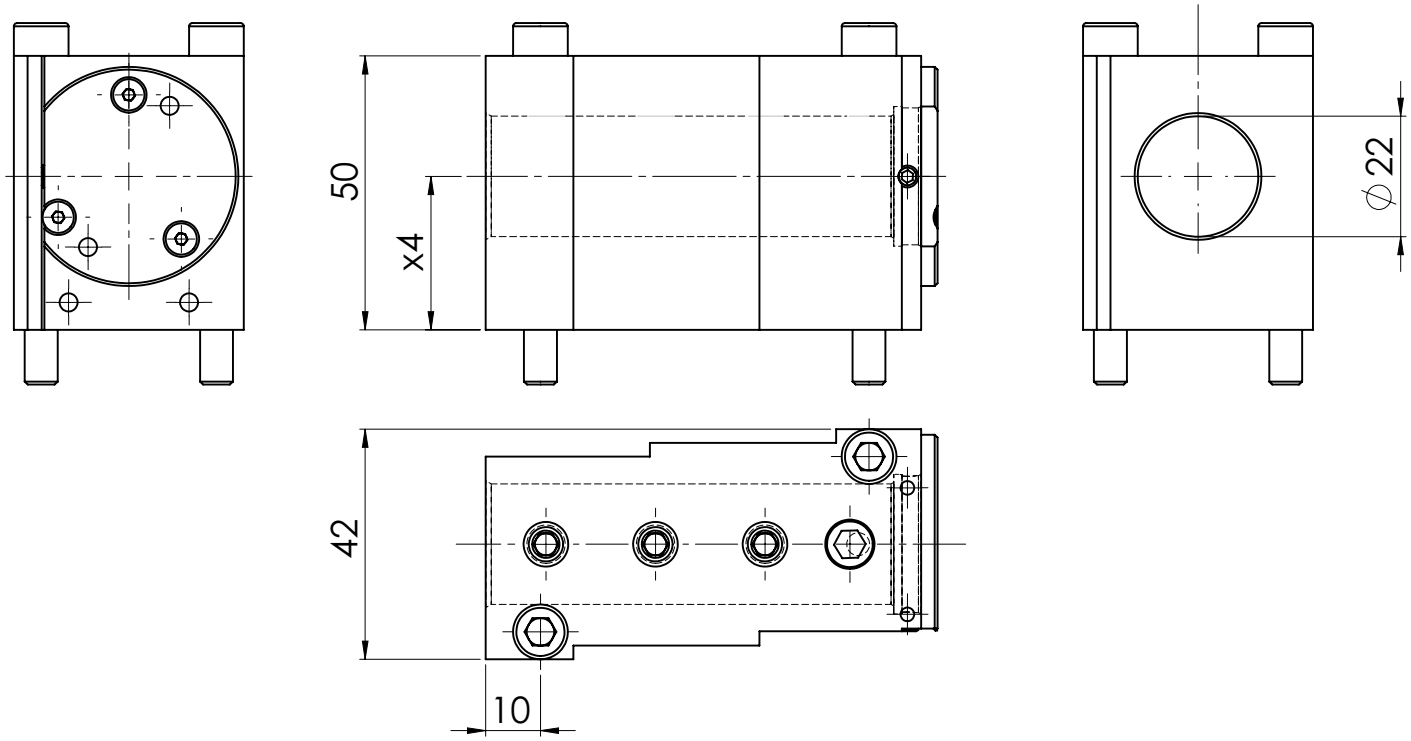


| [mm] | Spindle<br>Broche | [Nm] | [rpm] | | Outside cooling<br>Lubrificat. ext. | Internal cooling<br>Lubrificat. cent. | [bar] | Order no.<br>Nº de Code |
|---|---|---|---|---|---|---|---|---|
| **x4** | **Spindel** | **T max** | **n max** | **i** | **Aussenkühlung** | **Innenkühlung** | **p** | **Bestellnummer** |
| 28 | | | | | x | x | | WFE.022.H28.DGST |

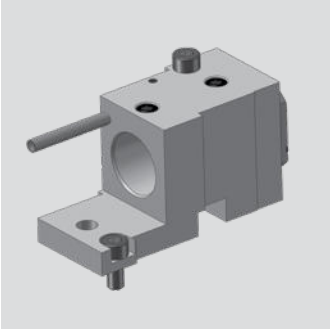

# Tornos Swiss Baureihe

**Modularer Basishalter**
modular basic holder
Support de base modulaire

**WG 35**

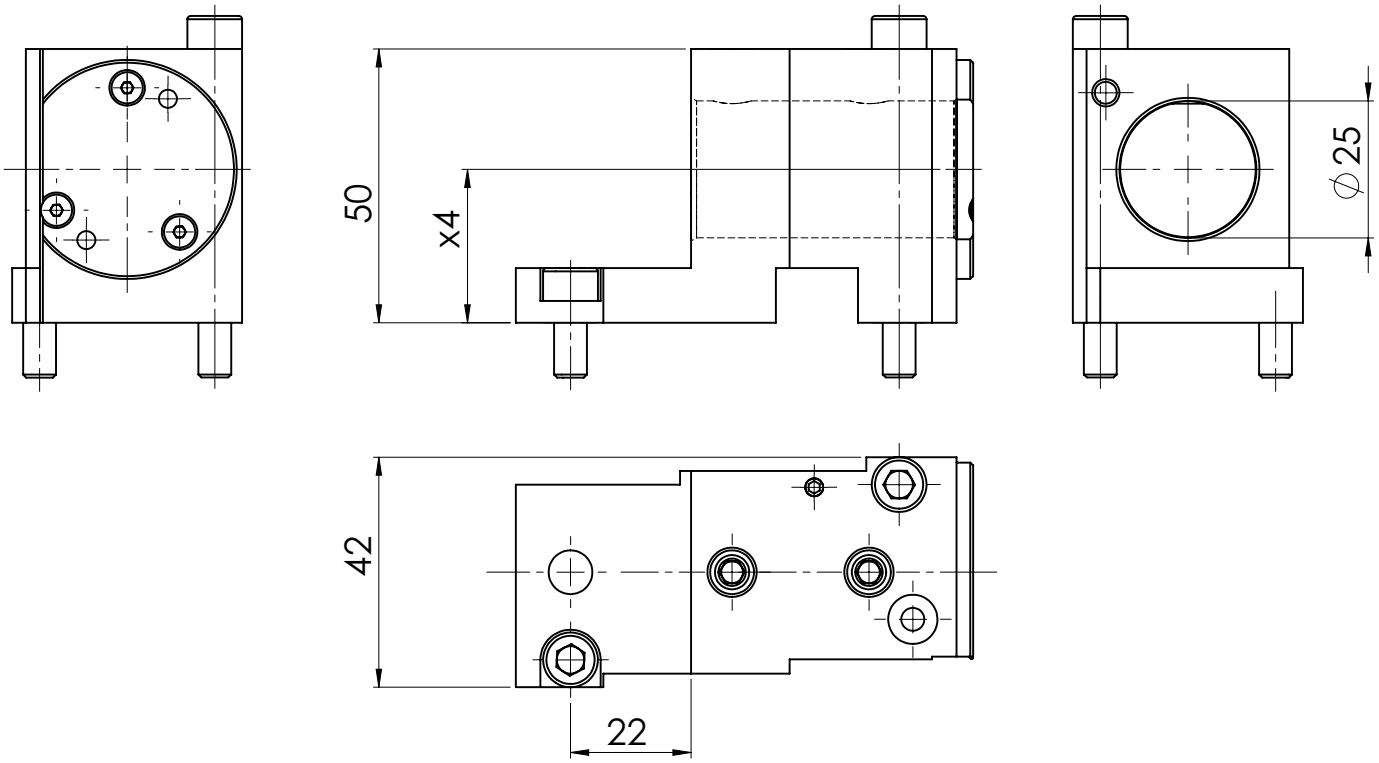


| [mm] | Spindle<br>Broche | [Nm] | [rpm] | | Outside cooling<br>Lubrificat. ext. | Internal cooling<br>Lubrificat. cent. | [bar] | Order no.<br>Nº de Code |
|---|---|---|---|---|---|---|---|---|
| **x4** | **Spindel** | **T max** | **n max** | **i** | **Aussenkühlung** | **Innenkühlung** | **p** | **Bestellnummer** |
| 28 | | | | | x | x | | WFE.025.H28.DGST |

**Passende Rundschaftaufnahmen siehe Seite 9.1**
matching round shanks see page 9.1

# Tornos Swiss Baureihe

**Modularer Basishalter**
modular basic holder
Support de base modulaire

**WG 35**

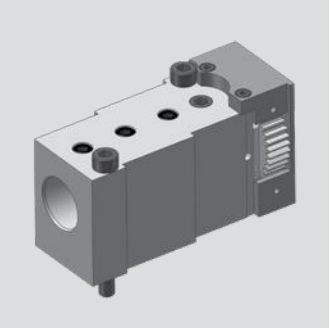

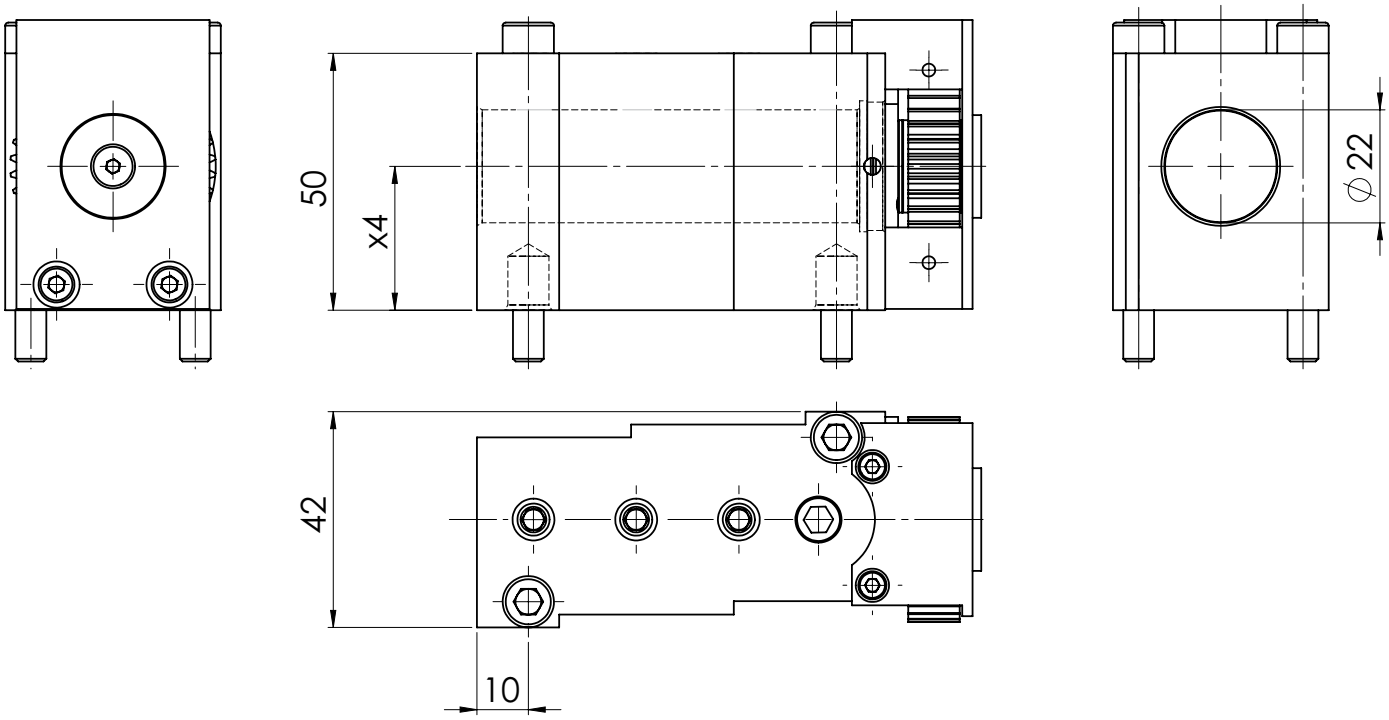


| [mm] | Spindle<br>Broche | [Nm] | [rpm] | | Outside cooling<br>Lubrificat. ext. | Internal cooling<br>Lubrificat. cent. | [bar] | Order no.<br>Nº de Code |
|---|---|---|---|---|---|---|---|---|
| **x4** | **Spindel** | **T max** | **n max** | **i** | **Aussenkühlung** | **Innenkühlung** | **p** | **Bestellnummer** |
| 28 | | | | | | x | | MPU.TO.D22.H28.DGST |

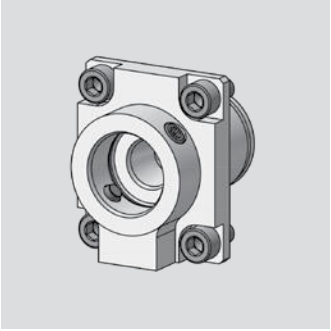

# Tsugami

**Modularer Basishalter**
modular basic holder
Support de base modulaire

**WG 35**

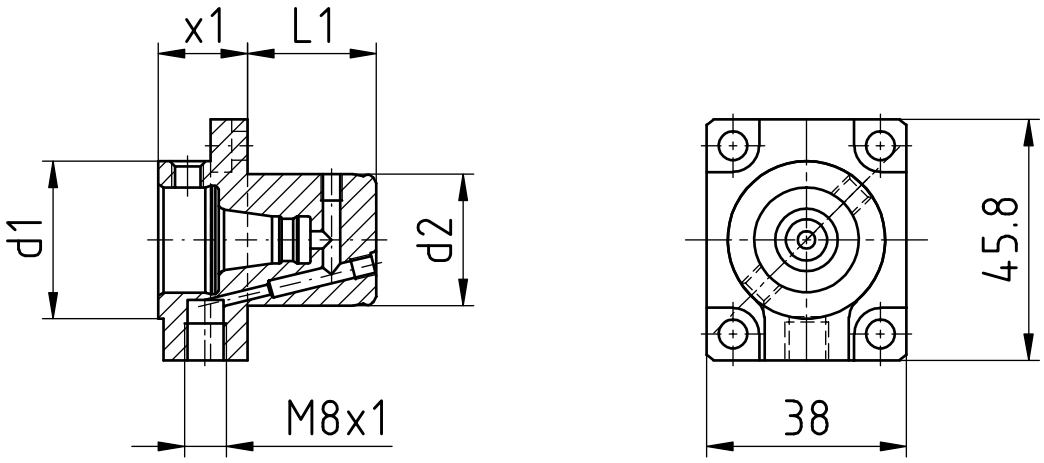


| [mm] | [mm] | [mm] | [mm] | Spindle<br>Broche | [Nm] | [rpm] | | Outside cooling<br>Lubrificat. ext. | Internal cooling<br>Lubrificat. cent. | [bar] | Order no.<br>Nº de Code |
|---|---|---|---|---|---|---|---|---|---|---|---|
| **d1** | **d2** | **x1** | **L1** | **Spindel** | **T max** | **n max** | **i** | **Aussenkühlung** | **Innenkühlung** | **p** | **Bestellnummer** |
| 30 | 25 | 17 | 24,5 | WFB 20-12 | | | | x | x | | WFB.020.SHT.Z25.TS.R |

# Modulare Drehhalter

# WF-MICRO

**WF-Micro**
think future

**Katalog MI-02**

# Inhaltsverzeichnis für WF-MICRO

Table of contents for WF-MICRO
Table des matiérs pour WF-MICRO


| Beschreibung / Description | Seite / Page |
|---|---|
| **Produktvorteile**<br>Product advantages WF-Micro | **10.1** |
| **Gebrauch und Wartung der WF-Micro Schnittstelle**<br>Handling and maintenance for WF-Micro connection | **10.2** |
| **WF-Micro Funktionsprinzip**<br>WF-Micro function | **10.3** |
| **WFMS-Statischer Halter**<br>WFMS-Static holder | **10.4** |
| **WFMS-Drehhalter**<br>WFMS-Turning tool holder | **10.5 - 10.9** |
| **WFMS-Klemmhalter System HORN**<br>WFMS-Turning holder with internal cooling Typ HORN | **10.10 - 10.17** |
| **WFMS-Rohlinge und Grundhalter**<br>WFMS-Blanks and basic holders | **10.18** |


**WG = Warengruppe**
**Article group**
**Groupe de marchandise**

**WG 11 =** _____

**WG 35 =** _____

**WG 40 =** _____

# Einsparungspotential durch WF-MICRO

WF-Micro – das innovative modulare Adaptersystem für statische Werkzeuge auf allen gängigen Langdrehmaschinen und Mehrspindeldrehautomaten, das Ihnen eine bis dato unerreichbare Produktivität ermöglicht.

Der Wechsel der Wendeschneidplatten ist oft durch die Bauweise der Maschinen nur bedingt möglich. Meist müssen die kompletten Grundhalter ausgebaut werden. Dies ist sehr zeitaufwändig und führt zu hohen Stillstandszeiten.

Das gehört jetzt der Vergangenheit an.

Die modularen WF-Micro Halter sind in den Ausführungen 10x10, 12x12, ½“x½“ und 16x16 lieferbar.

- Grundhalter mit integriertem Kühlmittelanschluss ermöglichen den Einsatz auf jeder möglichen Position in der Maschine.
- Die einfache Einhandbedienung erlaubt einen sicheren und einfachen Wechsel der Wendeschneidplattenadapter.
- Sämtliche Adapter können außerhalb der Maschine voreingestellt und vermessen werden.
- Der Werkzeugwechsel erfolgt innerhalb weniger Sekunden.
- Die Rüst- und Nebenzeiten werden auf ein Minimum reduziert und die Produktivität Ihrer Maschine auf ein Maximum gesteigert.
- Die Konzeption der Schnittstelle als Kurzkegel mit Plananlage und zylindrischer Abstützung garantiert eine exakte Lagepositionierung und Genauigkeit im einstelligen µ-Bereich.
- Die schwingungsdämpfende Eigenschaft der WF-Micro Schnittstelle ergibt deutlich bessere Bearbeitungsergebnisse und längere Standzeiten der Wendeschneidplatten.

**Nutzen Sie die Vorteile von WF-Micro und steigern Sie ihre Produktivität.**

# Gebrauch und Wartung

Handling and maintenance

**Hinweis zur Befestigung**
Zunächst einen Kegelgewindestift unter Verwendung eines Drehmoment-Schraubendrehers anziehen, dabei 1-2 mal lösen und wieder anziehen. Dadurch wird eine optimale Positionierung der Bauteile erreicht. Der 2. Kegelgewindestift wird nun ebenfalls(wie oben angeführt) angezogen.
**Empfohlenes Anzugsdrehmoment beträgt beim WFM-System: 4 Nm.**

**Pflege und Wartung**
Die Oberfläche der Planflächen, der Kegelbohrung und Kegelzapfen sind vor Gebrauch zu reinigen und mit einem Öl-Schmierfilm zu versehen. Um eine optimale Befestigung und Lösbarkeit der Kegelgewindesstifte zu erreichen, wird empfohlen die Kegelgewindestifte mit z.B. Molykote 1000 oder einer ähnlichen Heiss-Schraubenpaste zu behandeln.

**Advice for fixing**
First tighten one threaded pin, in doing so 1 or 2 times unscrew and tighten again. Thereby you get an optimum positioning of the components. The second threaded taper pin you will thighten with the same method.
**Recommended locking torque for the WFM System is 4 Nm.**

**Support and maintenance**
The surface of the face, the cone drill and cone pin must be cleaning and lubricate with oil before using. To reach an optimum fixing and resolvability of the threaded taper pins, are recommended to use for example Molykote 1000 or something similar.

# WF-MICRO Funktionsprinzip

WF-MICRO function

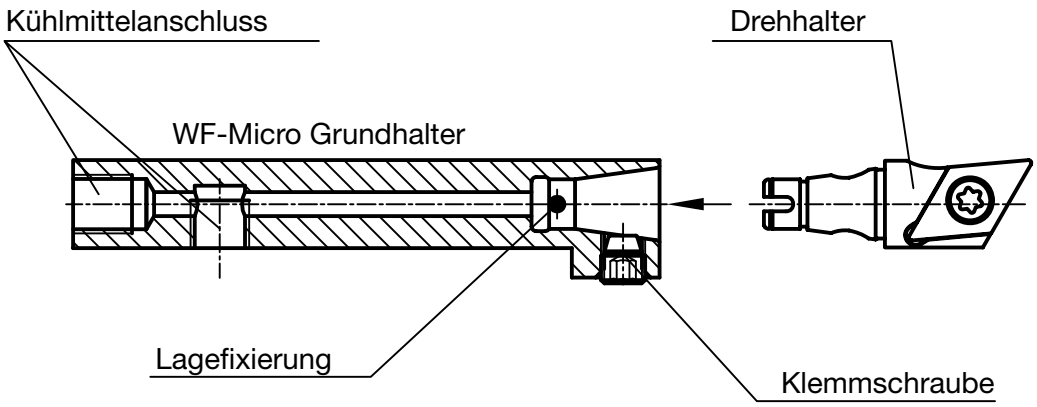


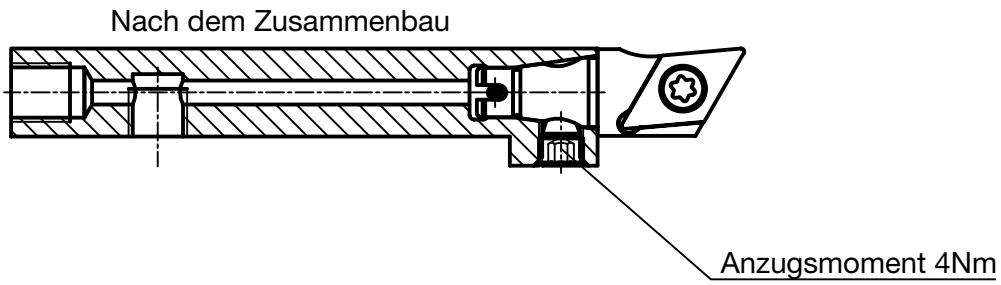


**Vorteile des WF-Micro Systems**

- Einfache Bedienung (nur eine Klemmschraube
- Garantierte Lagefixierung beim Fügen
- Höchste Präzision und Steifigkeit durch patentiertes Kegel-Plananlage-System mit zyl. Abstützung
- Ausserhalb der Maschine voreinstellbar

**advantages of the WF-Micro system**

- simple handing (only one screw)
- guaranteed positioninng
- highest precision and stiffness through patented taper and face system cylindrical stabilizer
- adjustment outside the machine

# WFMS - statische Halter

WFMS - static holders

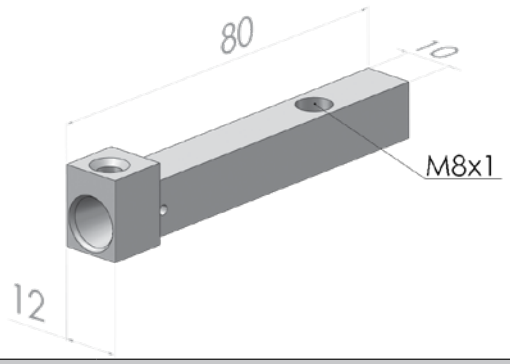


**Statischer Halter 8x8VKT mit IKZ**
Static holder with internal cooling

**Bestellnummer**
Order no. **WFMS.VKT.010.IK**

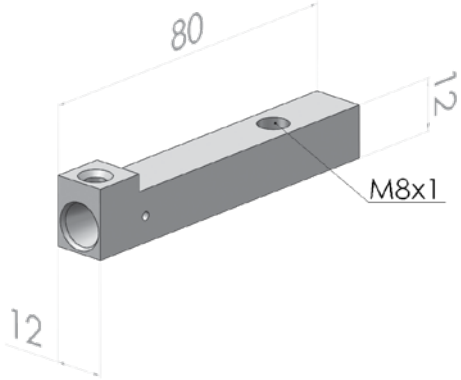


**Statischer Halter 12x12VKT mit IKZ**
Static holder with internal cooling

**Bestellnummer**
Order no. **WFMS.VKT.012.IK**

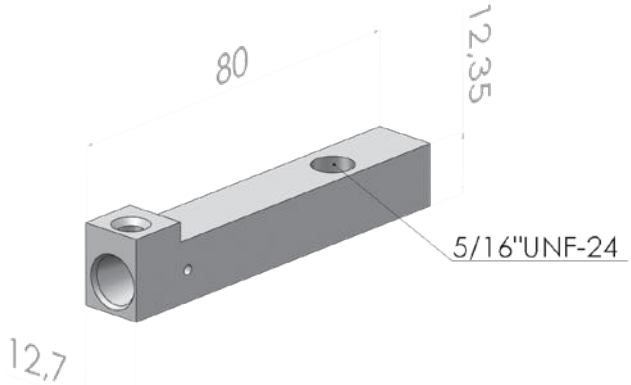


**Statischer Halter 12,7x12,7VKT mit IKZ**
Static holder with internal cooling

**Bestellnummer**
Order no. **WFMS.VKT.012,7.IK**

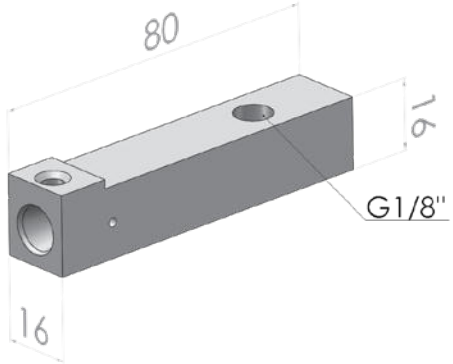


**Statischer Halter 16x16VKT mit IKZ**
Static holder with internal cooling

**Bestellnummer**
Order no. **WFMS.VKT.016.IK**

# WFMS - modulare Drehhalter ISO Typ Bezeichnungssystem

WFMS-modular turning holders
ISO type Designation system

| Befesti-gungsart | Wendeplat-tenform | Klemm-halterform | Wendeplat-ten-freiwinkel | Schnittrich-tung | Schneidplat-ten-größe | Kühlung |
|---|---|---|---|---|---|---|
| S (geschraubt durch Bohrung) | C 80° | J 93° 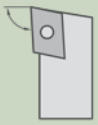 | C 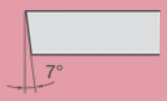  | L 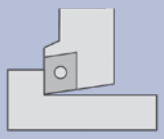 | 07 | IK (Innen-kühlung) |
| | D 55° | L 95° | | N 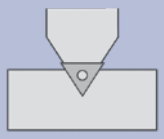 | 09 | |
| | V 35° | N 63° 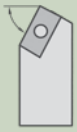 | | R 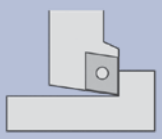 | 11 | |
| | | V 72,5° | | | 13 | |

Produktbeispiel:
WF.M.12.SVJCR.11.IK

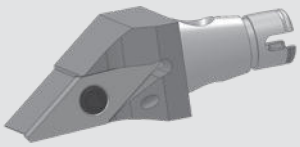

| WF | M | 12 | S | V | J | C | R | 11 | IK |
|---|---|---|---|---|---|---|---|---|---|

# WFMS - modulare Drehhalter ISO C Typ

WFMS - modular turning holders
ISO C type

**WG 40**

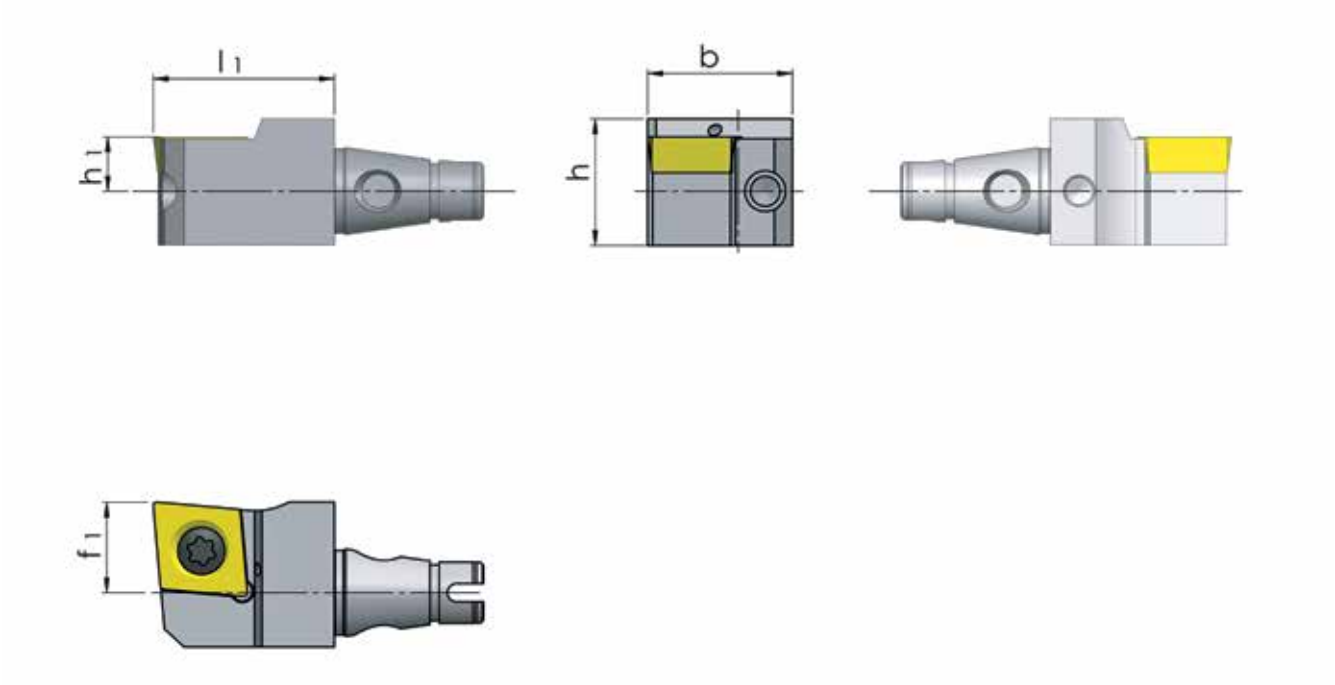


| fits for holder | [mm] | [mm] | [mm] | [mm] | [mm] | Order no. |
|---|---|---|---|---|---|---|
| **passend für Halter** | **h** | **b** | **l1** | **h1** | **f1** | **Bestellnummer** |
| 10x10, 12x12, 1/2"x1/2" | 14 | 16 | 20 | 6 | 6 | WF.M.12.SCLCL.09.IK |
| 10x10, 12x12, 1/2"x1/2" | 14 | 16 | 20 | 6 | 6 | WF.M.12.SCLCR.09.IK |
| 16x16 | 20 | 18 | 20 | 8 | 8 | WF.M.16.SCLCL.09.IK |
| 16x16 | 20 | 18 | 20 | 8 | 8 | WF.M.16.SCLCR.09.IK |

# WFMS - modulare Drehhalter ISO D Typ

WFMS - modular turning holders
ISO D type

**WG 40**

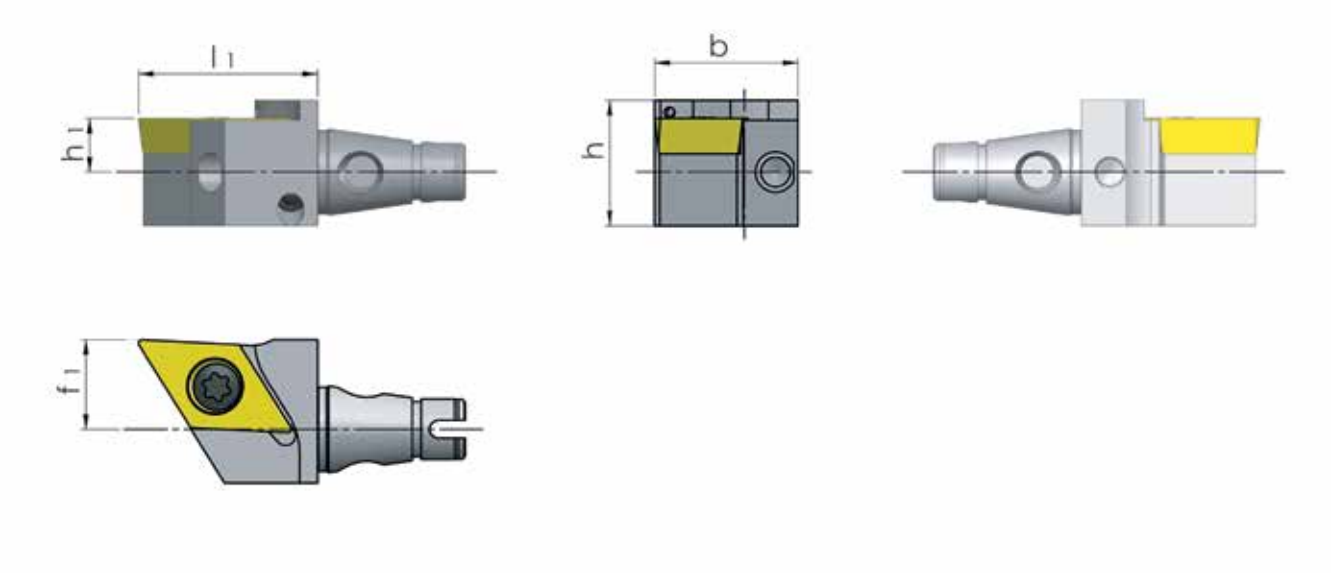


| fits for holder | [mm] | [mm] | [mm] | [mm] | [mm] | Order no. |
|---|---|---|---|---|---|---|
| **passend für Halter** | **h** | **b** | **l1** | **h1** | **f1** | **Bestellnummer** |
| 10x10, 12x12, 1/2"x1/2" | 14 | 16 | 20 | 6 | 6 | WF.M.12.SDJCL.11.IK |
| 10x10, 12x12, 1/2"x1/2" | 14 | 16 | 20 | 6 | 6 | WF.M.12.SDJCR.11.IK |
| 10x10, 12x12, 1/2"x1/2" | 14 | 16 | 25 | 6 | 0 | WF.M.12.SDNCN.11.IK |
| 16x16 | 18 | 18 | 20 | 8 | 8 | WF.M.16.SDJCL.11.IK |
| 16x16 | 18 | 18 | 20 | 8 | 8 | WF.M.16.SDJCR.11.IK |

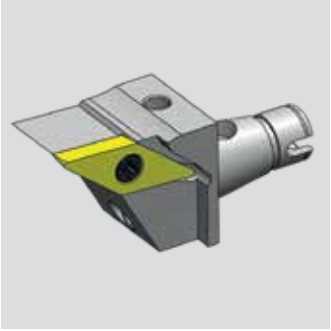

# WFMS - modulare Drehhalter ISO V Typ

WFMS - modular turning holders
ISO V type

**WG 40**

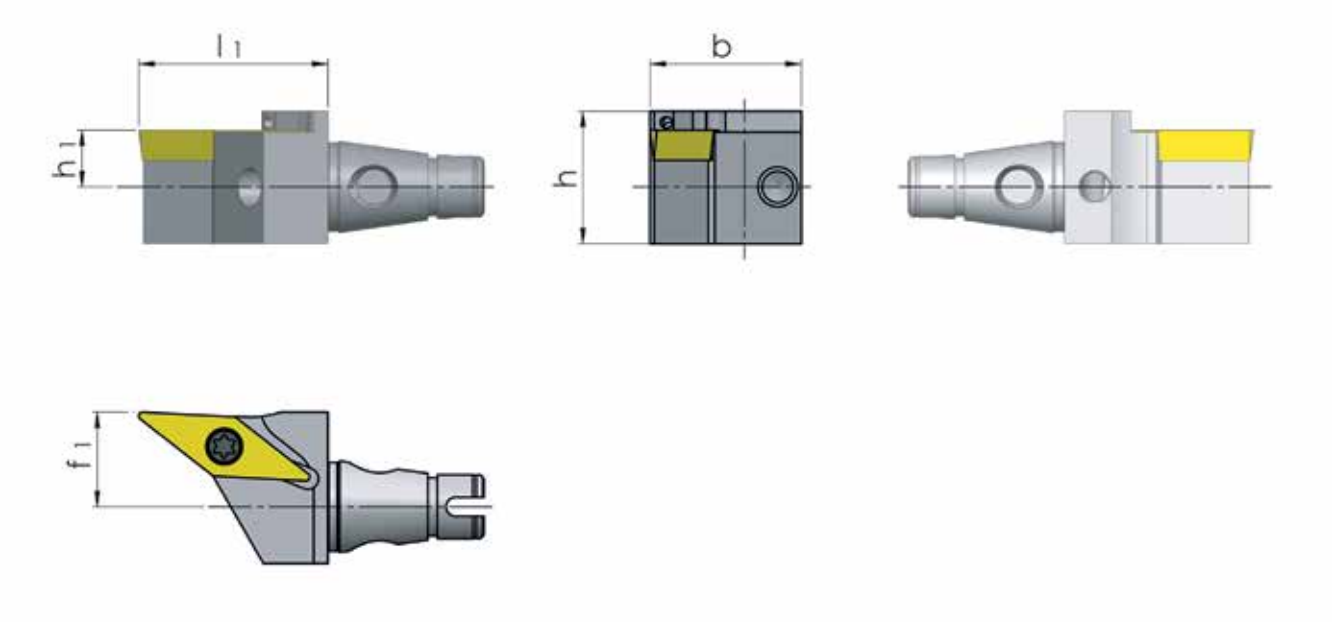


| fits for holder | [mm] | [mm] | [mm] | [mm] | [mm] | Order no. |
|---|---|---|---|---|---|---|
| **passend für Halter** | **h** | **b** | **l1** | **h1** | **f1** | **Bestellnummer** |
| 10x10, 12x12, 1/2"x1/2" | 14 | 16 | 20 | 6 | 6 | WF.M.12.SVJCL.11.IK |
| 10x10, 12x12, 1/2"x1/2" | 14 | 16 | 20 | 6 | 6 | WF.M.12.SVJCR.11.IK |
| 10x10, 12x12, 1/2"x1/2" | 15 | 16 | 25 | 6 | 0 | WF.M.12.SVVCN.11.IK |
| 10x10, 12x12, 1/2"x1/2" | 14 | 16 | 25 | 6 | 10 | WF.M.12.SVJCL.13.IK |
| 10x10, 12x12, 1/2"x1/2" | 14 | 16 | 25 | 6 | 6 | WF.M.12.SVJCR.13.IK |
| 16x16 | 18 | 18 | 20 | 8 | 8 | WF.M.16.SVJCL.11.IK |
| 16x16 | 18 | 18 | 20 | 8 | 8 | WF.M.16.SVJCR.11.IK |

# WFMS - modulare Drehhalter

WFMS - modular turning holders

**WG 40**

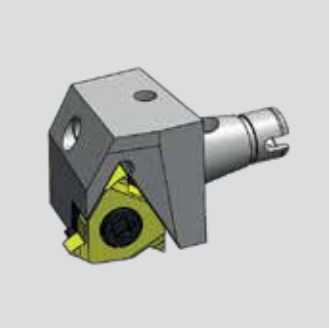

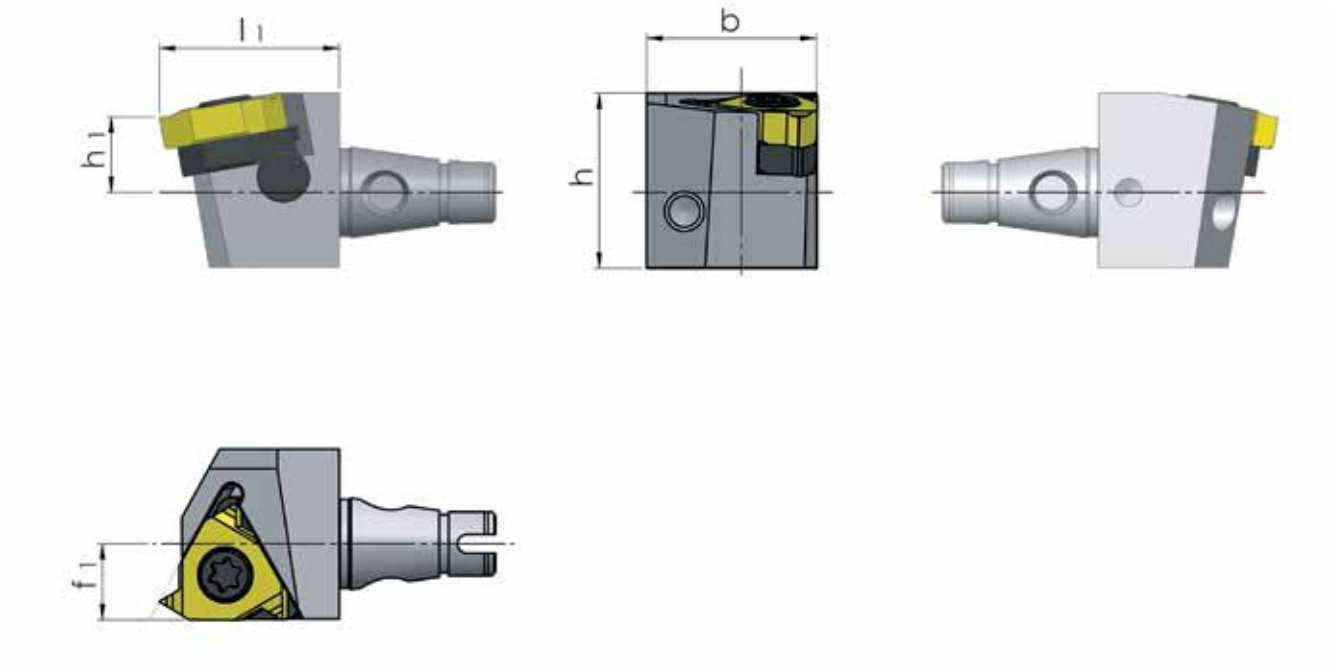


| fits for holder | [mm] | [mm] | [mm] | [mm] | [mm] | Order no. |
|---|---|---|---|---|---|---|
| **passend für Halter** | **h** | **b** | **l1** | **h1** | **f1** | **Bestellnummer** |
| 10x10, 12x12, 1/2"x1/2" | 19 | 16 | 20 | 6 | 6 | WF.M.11E.IK.R |
| 16x16 | 18 | 18 | 20 | 8 | 8 | WF.M.16E.IK.R |

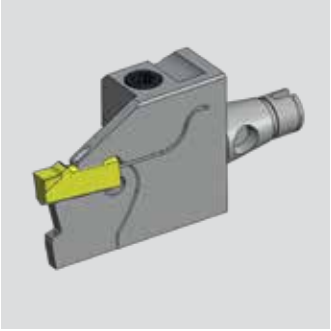

# WFMS - Klemmhalter HORN H100

WFMS - Toolholder HORN H100

**WG 40**

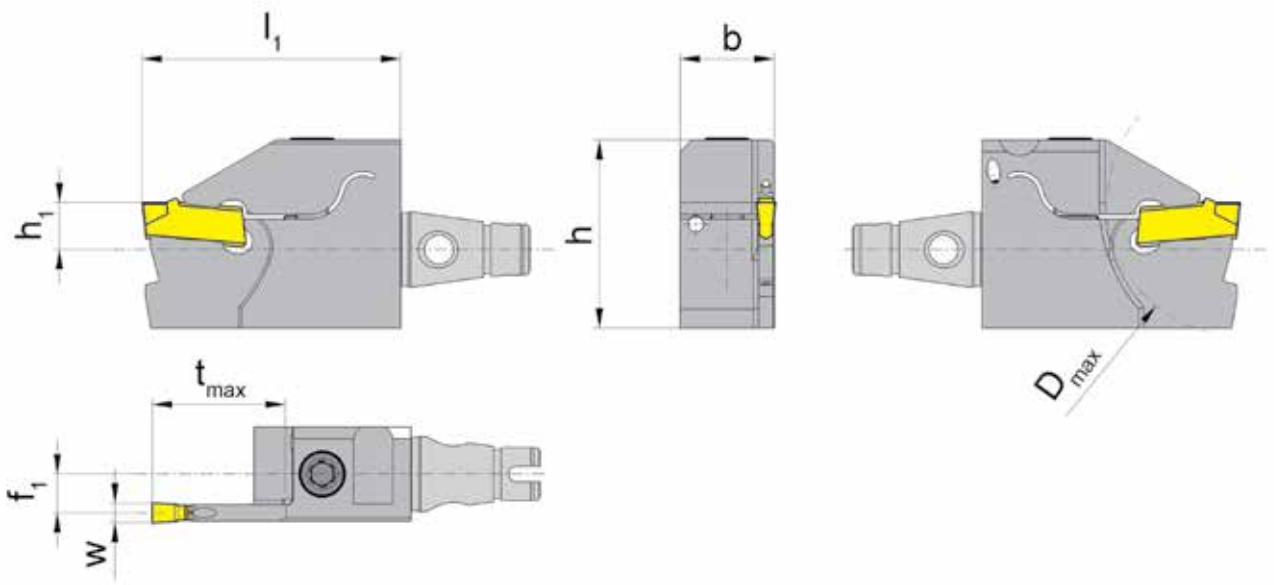


| fits for holder<br>**passend für Halter** | [mm]<br>**h** | [mm]<br>**b** | [mm]<br>**l1** | [mm]<br>**h1** | [mm]<br>**f1** | [mm]<br>**tmax** | [mm]<br>**Dmax** | [mm]<br>**w** | **Größe** | Order no.<br>**Bestellnummer** |
|---|---|---|---|---|---|---|---|---|---|---|
| 10x10, 12x12, 1/2"x1/2" | 24 | 12 | 33 | 6 | 5,2 | 17 | 34 | 2 | 01 | WF.M.12.R100.4.41.IK |
| 10x10, 12x12, 1/2"x1/2" | 24 | 12 | 33 | 6 | 4,95 | 17 | 34 | 2,5 | 02 | WF.M.12.R100.4.42.IK |
| 10x10, 12x12, 1/2"x1/2" | 24 | 12 | 33 | 6 | 4,75 | 17 | 34 | 3 | 03 | WF.M.12.R100.4.43.IK |
| 16x16 | 26 | 16 | 33 | 8 | 7,2 | 17 | 34 | 2 | 01 | WF.M.16.R100.4.41.IK |
| 16x16 | 26 | 16 | 33 | 8 | 6,95 | 17 | 34 | 2,5 | 02 | WF.M.16.R100.4.42.IK |
| 16x16 | 26 | 16 | 33 | 8 | 6,75 | 17 | 34 | 3 | 03 | WF.M.16.R100.4.43.IK |

Spare Parts
**Ersatzteile**

| Screw<br>**Spannschraube** | Clamp<br>**Spannelement** | TORX PLUS Wrench<br>**TORX PLUS-Schlüssel** | For torque specification Nm<br>**Das Anzugsmoment der Schrauben ist Nm.** | Toolholder<br>**Klemmhalter** |
|---|---|---|---|---|
| 4.20T15P | | T15PL | 4,3 | WF.M.1...R100...IK |

# WFMS - Klemmhalter HORN H224

WFMS - Toolholder HORN H224

**WG 40**

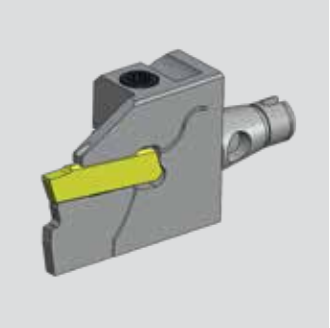

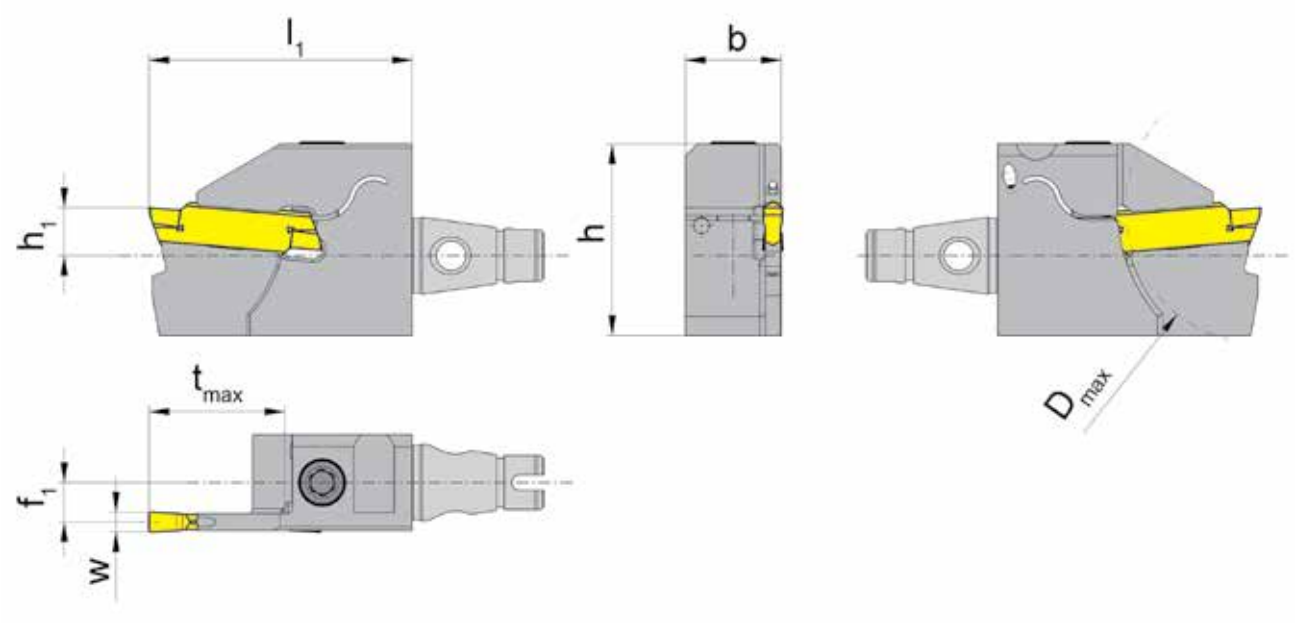


| fits for holder | [mm] | [mm] | [mm] | [mm] | [mm] | [mm] | [mm] | [mm] | | Order no. |
|---|---|---|---|---|---|---|---|---|---|---|
| **passend für Halter** | **h** | **b** | **l1** | **h1** | **f1** | **tmax** | **Dmax** | **w** | **Größe** | **Bestellnummer** |
| 10x10, 12x12, 1/2"x1/2" | 24 | 12 | 33 | 6 | 5,2 | 17 | 34 | 2 | 01 | WF.M.12.R224.4.41.IK |
| 10x10, 12x12, 1/2"x1/2" | 24 | 12 | 33 | 6 | 4,95 | 17 | 34 | 2,5 | 02 | WF.M.12.R224.4.42.IK |
| 10x10, 12x12, 1/2"x1/2" | 24 | 12 | 33 | 6 | 4,75 | 17 | 34 | 3 | 03 | WF.M.12.R224.4.43.IK |
| 16x16 | 26 | 16 | 33 | 8 | 7,2 | 17 | 34 | 2 | 01 | WF.M.16.R224.4.41.IK |
| 16x16 | 26 | 16 | 33 | 8 | 6,95 | 17 | 34 | 2,5 | 02 | WF.M.16.R224.4.42.IK |
| 16x16 | 26 | 16 | 33 | 8 | 6,75 | 17 | 34 | 3 | 03 | WF.M.16.R224.4.43.IK |

Spare Parts

**Ersatzteile**

| Screw | Clamp | TORX PLUS Wrench | For torque specification Nm | Toolholder |
|---|---|---|---|---|
| **Spannschraube** | **Spannelement** | **TORX PLUS-Schlüssel** | **Das Anzugsmoment der Schrauben ist Nm.** | **Klemmhalter** |
| 4.20T15P | | T15PL | 4,3 | WF.M.1...R224...IK |

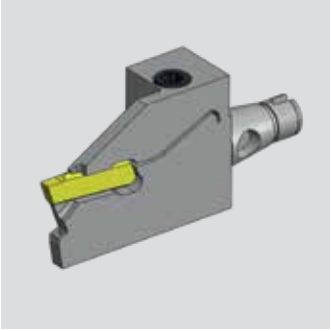

# WFMS - Klemmhalter HORN H264

WFMS - Toolholder HORN H264

**WG 40**

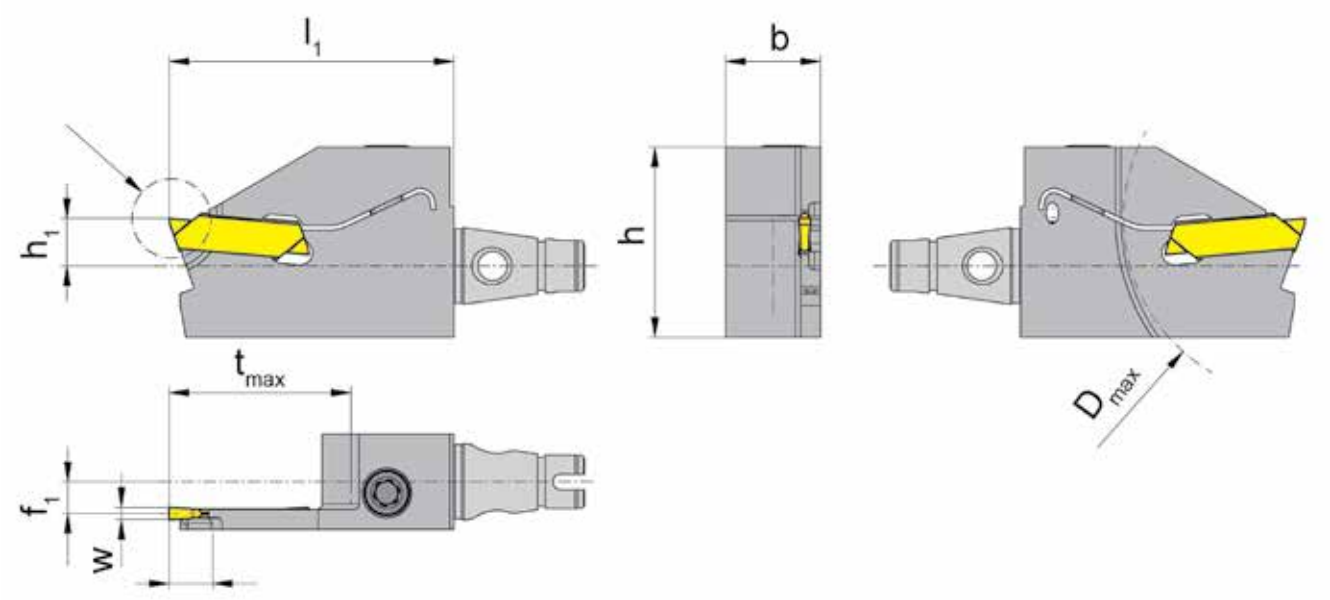


| fits for holder<br>**passend für Halter** | [mm]<br>**h** | [mm]<br>**b** | [mm]<br>**l1** | [mm]<br>**h1** | [mm]<br>**f1** | [mm]<br>**tmax** | [mm]<br>**Dmax** | [mm]<br>**w** | **Größe** | Order no.<br>**Bestellnummer** |
|---|---|---|---|---|---|---|---|---|---|---|
| 10x10, 12x12, 1/2"x1/2" | 24 | 12 | 36 | 6 | 4 | 5,5 | 10 | 1,5 | 01 | WF.M.12.R264.1.51.IK |
| 16x16 | 23 | 16 | 36 | 8 | 6 | 5,5 | 10 | 1,5 | 01 | WF.M.16.R264.1.51.IK |

Spare Parts
**Ersatzteile**

| Screw<br>**Spannschraube** | Clamp<br>**Spannelement** | TORX PLUS Wrench<br>**TORX PLUS-Schlüssel** | For torque specification Nm<br>**Das Anzugsmoment der Schrauben ist Nm.** | Toolholder<br>**Klemmhalter** |
|---|---|---|---|---|
| 4.20T15P | | T15PL | 4,3 | WF.M.1...R264.1.51.IK |

# WFMS - Klemmhalter HORN H274

WFMS - Toolholder HORN H274

**WG 40**

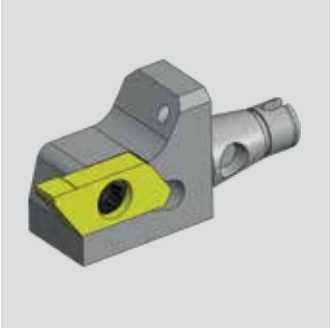

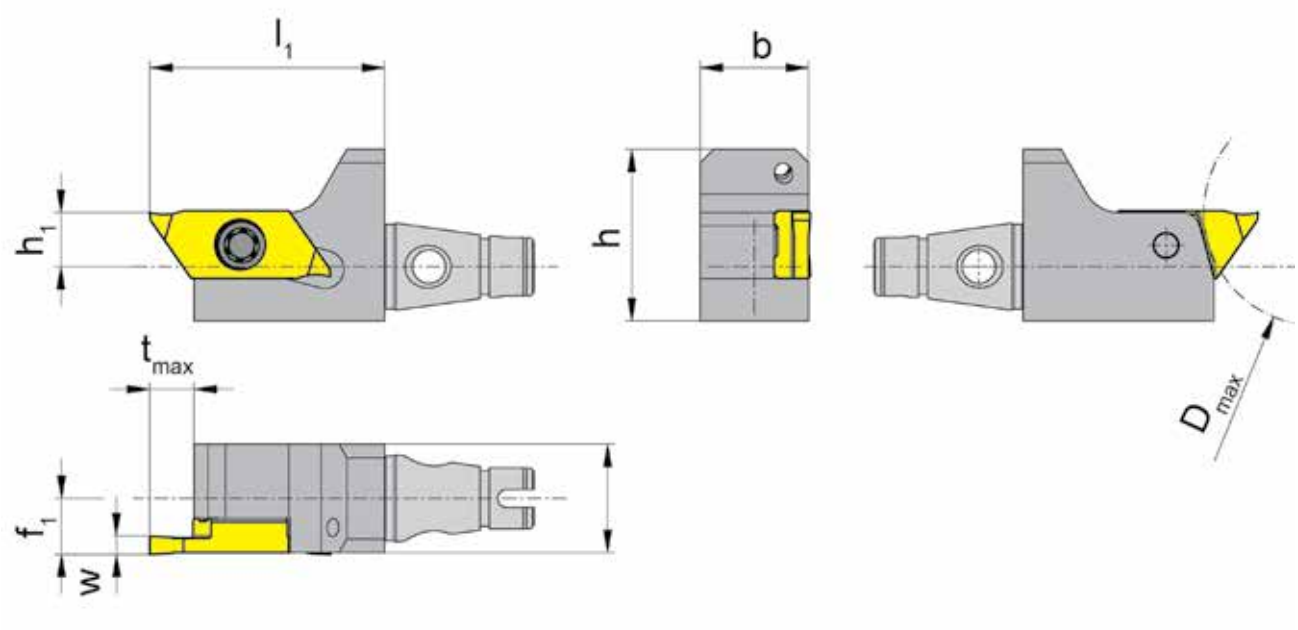


| fits for holder | [mm] | [mm] | [mm] | [mm] | [mm] | [mm] | [mm] | [mm] | | Order no. |
|---|---|---|---|---|---|---|---|---|---|---|
| **passend für Halter** | **h** | **b** | **l1** | **h1** | **f1** | **tmax** | **Dmax** | **w** | **Größe** | **Bestellnummer** |
| 10x10, 12x12, 1/2"x1/2" | 19 | 12 | 26 | 6 | 6,2 | 6 | 25 | 04 | 01 | WF.M.12.R274.2.24.IK |
| 16x16 | 23 | 16 | 26 | 8 | 8,2 | 6 | 25 | 04 | 02 | WF.M.16.R274.2.24.IK |

Spare Parts

**Ersatzteile**

| Screw | Clamp | TORX PLUS Wrench | For torque specification Nm | Toolholder |
|---|---|---|---|---|
| **Spannschraube** | **Spannelement** | **TORX PLUS-Schlüssel** | **Das Anzugsmoment der Schrauben ist Nm.** | **Klemmhalter** |
| 030.3509.T15P | | T15PQ | 3,0 | WF.M.1...R274.2.24.IK |

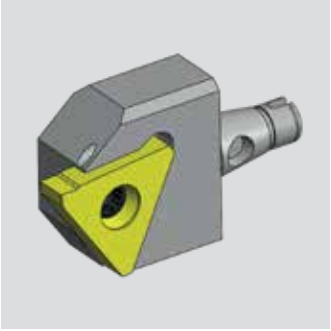

# WFMS - Klemmhalter HORN H356

WFMS - Toolholder HORN H356

**WG 40**

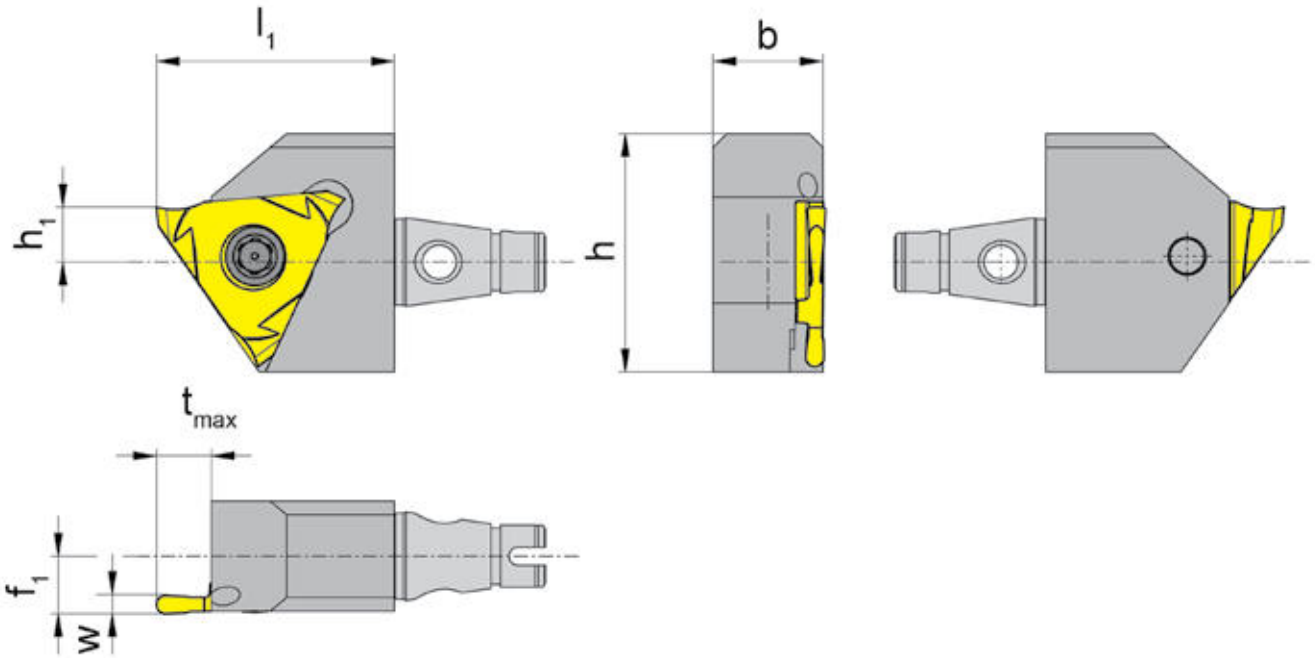


| fits for holder | [mm] | [mm] | [mm] | [mm] | [mm] | | Order no. |
|---|---|---|---|---|---|---|---|
| **passend für Halter** | **h** | **b** | **l1** | **h1** | **f1** | **Größe** | **Bestellnummer** |
| 10x10, 12x12, 1/2"x1/2" | 26 | 12 | 26 | 6 | 6,3 | 03 | WF.M.12.R356.1.23.IK |
| 16x16 | 26 | 16 | 26 | 8 | 8,3 | 03 | WF.M.16.R356.1.23.IK |

Spare Parts

**Ersatzteile**

| Screw | Clamp | TORX PLUS Wrench | For torque specification Nm | Toolholder |
|---|---|---|---|---|
| **Spannschraube** | **Spannelement** | **TORX PLUS-Schlüssel** | **Das Anzugsmoment der Schrauben ist Nm.** | **Klemmhalter** |
| 030.500P.0232 | | T20PQ | 6,0 - 6,5 | WF.M.12.R356.1.23.IK |
| 5.12T20P | | T20PQ | 6,0 - 6,5 | WF.M.16.R356.1.23.IK |

# WFMS - Klemmhalter HORN H360

WFMS - Toolholder HORN H360

**WG 40**

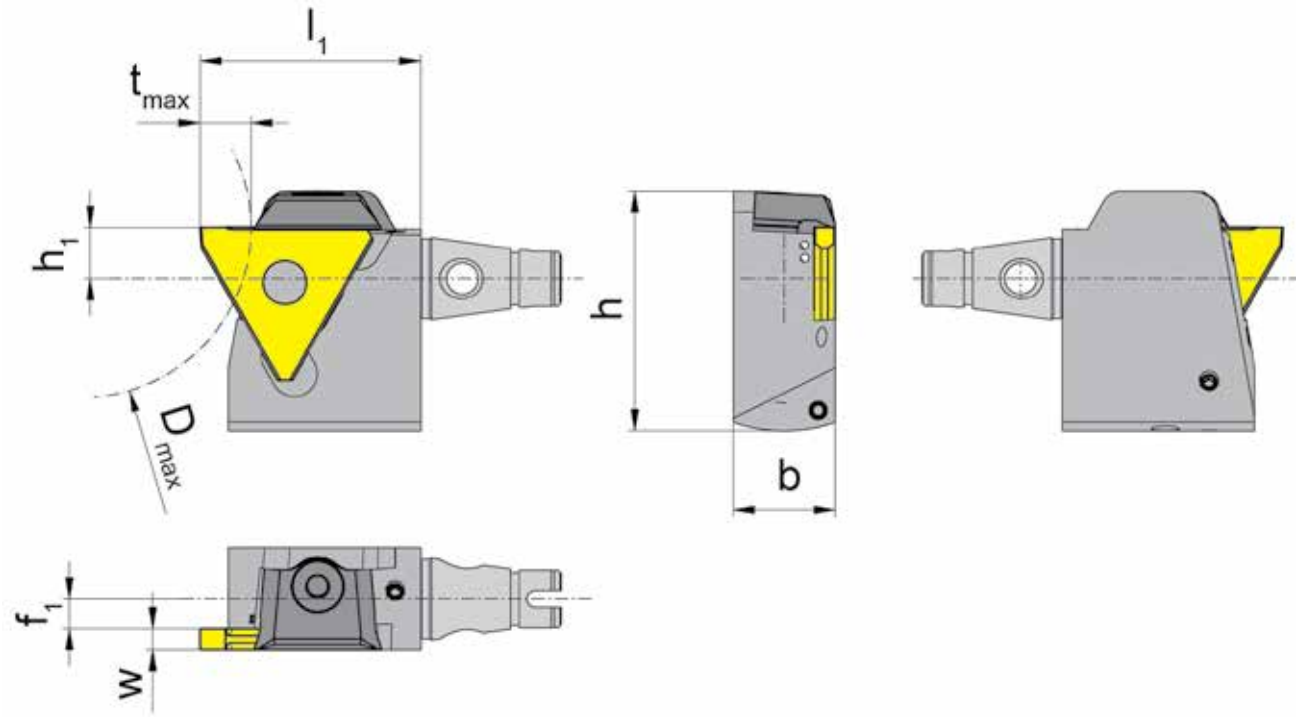


| fits for holder | [mm] | [mm] | [mm] | [mm] | [mm] | [mm] | [mm] | [mm] | | Order no. |
|---|---|---|---|---|---|---|---|---|---|---|
| **passend für Halter** | **h** | **b** | **l1** | **h1** | **f1** | **tmax** | **Dmax** | **w** | **Größe** | **Bestellnummer** |
| 10x10, 12x12, 1/2"x1/2" | 28,2 | 12 | 26 | 6 | 4,5 | 4 | 40 | 0,5 - 1,9 | 01 | WF.M.12.R360.1.51.IK |
| 10x10, 12x12, 1/2"x1/2" | 28,2 | 12 | 26 | 6 | 3,5 | 6 | 40 | 1,9 - 2,9 | 02 | WF.M.12.R360.2.52.IK |
| 10x10, 12x12, 1/2"x1/2" | 28,2 | 12 | 26 | 6 | 2,5 | 6 | 40 | 2,9 - 3,9 | 03 | WF.M.12.R360.2.53.IK |
| 16x16 | 30,2 | 16 | 26 | 8 | 6,5 | 4 | 40 | 0,5 - 1,9 | 01 | WF.M.16.R360.1.51.IK |
| 16x16 | 30,2 | 16 | 26 | 8 | 5,5 | 6 | 40 | 1,9 - 2,9 | 02 | WF.M.16.R360.2.52.IK |
| 16x16 | 30,2 | 16 | 26 | 8 | 4,5 | 6 | 40 | 2,9 - 3,9 | 03 | WF.M.16.R360.2.53.IK |

Spare Parts

**Ersatzteile**

| Screw<br>**Spannschraube** | Clamp<br>**Spannelement** | TORX PLUS Wrench<br>**TORX PLUS-Schlüssel** | For torque specification Nm<br>**Das Anzugsmoment der Schrauben ist Nm.** | Toolholder<br>**Klemmhalter** |
|---|---|---|---|---|
| | 12.3 | T10PL | 3,0 | WF.M.1...R360…IK |

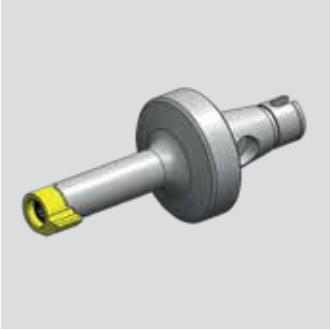

# WFMS - Klemmhalter HORN Mini 106 - 11P

WFMS - Toolholder HORN Mini 106 - 11P

**WG 40**

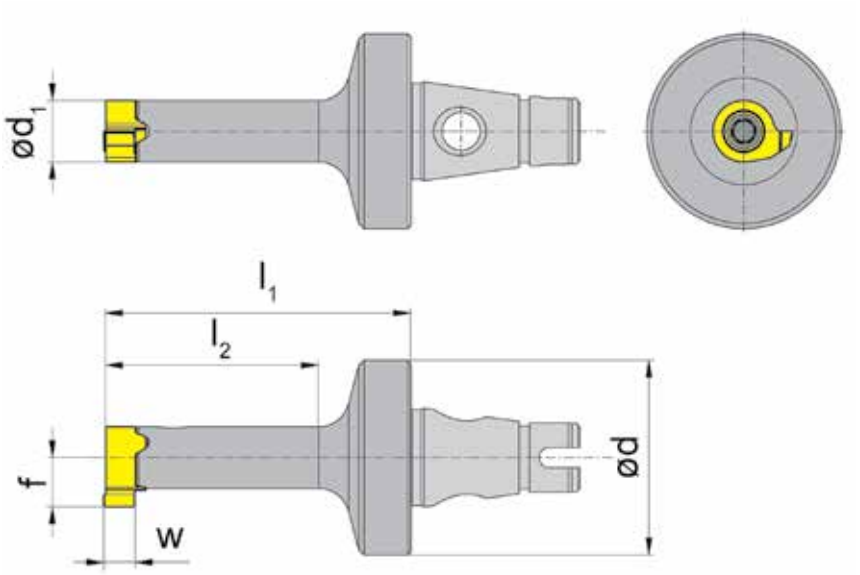


| fits for holder<br>**passend für Halter** | [mm]<br>**d** | [mm]<br>**d1** | [mm]<br>**l1** | [mm]<br>**l2** | Order no.<br>**Bestellnummer** |
|---|---|---|---|---|---|
| Ø 19,05-28 | 19 | 4,4 | 17 | 8,5 | WF.M.RB106.00.IK |
| Ø 19,05-28 | 19 | 5,2 | 19 | 10 | WF.M.RB107.00.IK |
| Ø 19,05-28 | 19 | 6 | 21,5 | 12,5 | WF.M.B108.00.IK |
| Ø 19,05-28 | 19 | 6 | 30 | 21 | WF.M.B108.01.IK |
| Ø 19,05-28 | 19 | 6 | 21 | 12,5 | WF.M.RB10P.00.IK |
| Ø 19,05-28 | 19 | 8 | 26 | 16,5 | WF.M.B111.00.IK |
| Ø 19,05-28 | 19 | 8 | 38,5 | 29 | WF.M.B111.01.IK |
| Ø 19,05-28 | 19 | 7 | 24 | 15 | WF.M.RB11P.00.IK |

Spare Parts
**Ersatzteile**

| Screw<br>**Spannschraube** | Clamp<br>**Spannelement** | TORX PLUS Wrench<br>**TORX PLUS-Schlüssel** | For torque specification Nm<br>**Das Anzugsmoment der Schrauben ist Nm.** | Toolholder<br>**Klemmhalter** |
|---|---|---|---|---|
| 1.8.4TEP | | T6PL | 0,9 | WF.M.RB106.00.IK |
| 2.2.5T7EP | 010.0105.03 | T7PL | 1,1 | WF.M.RB107.00.IK |
| 2.6.5T8EP | 010.0105.04 | T8PL | 1,2 | WF.M.B108.00.IK /..B10P../.. |
| 3.5.12T10EP | 010.0105.05 | T10PL | 3 | WF.M.B111.00.IK |
| 3.10T9P | | T9PL | 1,8 | WF.M.RB11P.00.IK |

# WFMS - Klemmhalter HORN Supermini® 105-110

WFMS - Toolholder HORN Supermini 105-110

**WG 40**

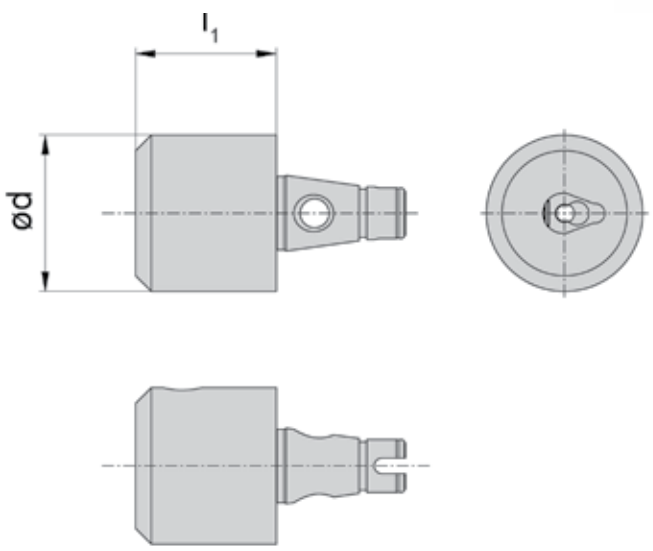


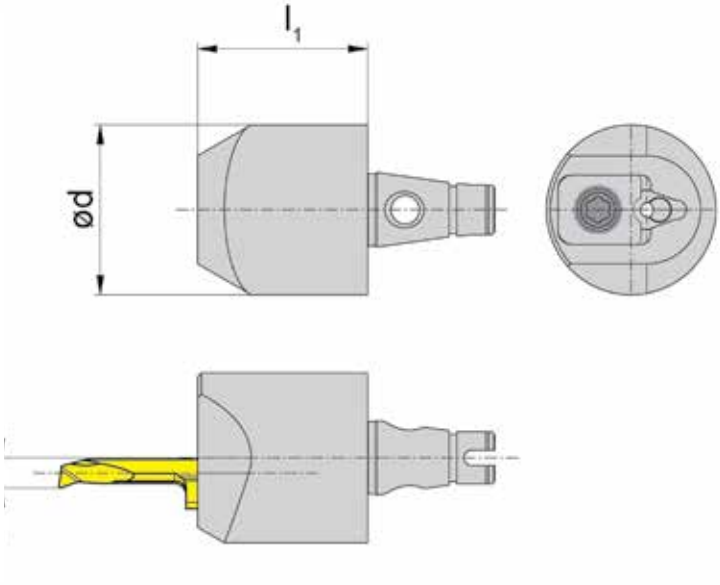


| fits for holder<br>**passend für Halter** | [mm]<br>**d** | [mm]<br>**l1** | [mm]<br>**f1** | [mm]<br>***b** | Order no.<br>**Bestellnummer** |
|---|---|---|---|---|---|
| Ø 19,05-28 | 20 | 18 | - | - | WF.M.B105.IK |
| Ø 19,05-28 | 22 | 30 | - | - | WF.M.B110.IK |
| Ø 19,05-28 | 22 | 22 | 3,3 | 5,9 | WF.M.B105.S.03.IK |
| Ø 19,05-28 | 22 | 22 | 3,9 | 6,4 | WF.M.B105.S.04.IK |
| Ø 19,05-28 | 21 | 22 | 5,3 | 7,0 | WF.M.B105.S.05.IK |

*b = Schneidplattenhöhe

*b = Height of insert

Spare Parts

**Ersatzteile**

| Screw<br>**Spannschraube** | Clamp<br>**Spannelement** | TORX PLUS Wrench<br>**TORX PLUS-Schlüssel** | For torque specification Nm<br>**Das Anzugsmoment der Schrauben ist Nm.** | Toolholder<br>**Klemmhalter** |
|---|---|---|---|---|
| 6.075T15P | | T15PQ | 5 | WF.M.B105.IK / WF.M.B110.IK |
| | 010.0105.03 | T15PL | 2 | WF.M.B105.S.03.IK |
| | 010.0105.04 | T15PL | 2 | WF.M.B105.S.04.IK |
| | 010.0105.05 | T15PL | 2 | WF.M.B105.S.05.IK |

# WFMS - Rohlinge und Grundhalter

WFMS - blanks and basic holders

**WG 40**

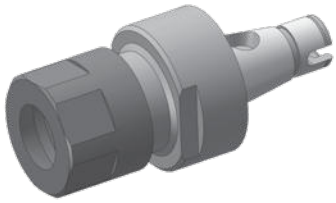

**Drehhalter Typ ER11**
Turning holder type ER11

**Bestellnummer**
Order no. **WFMS.E11.025.M**

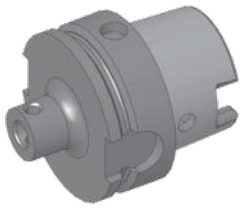

**Drehhalter Grundhalter HSK63**
Turning holder basicholder HSK63

**Bestellnummer**
Order no. **WFMS.020.H63**

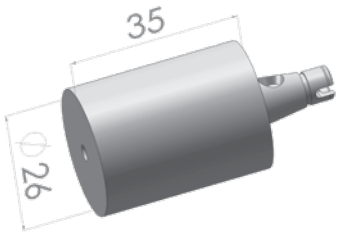


**Drehhalter Rohling Ø 26**
Turning holder blank Ø 26

**Bestellnummer**
Order no. **WFMS.R.D26x35**

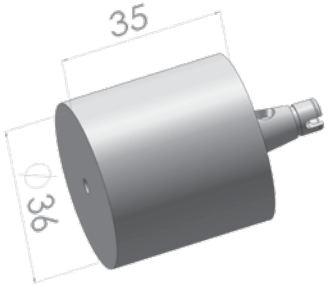


**Drehhalter Rohling Ø 36**
Turning holder blank Ø 36

**Bestellnummer**
Order no. **WFMS.R.D36x35**

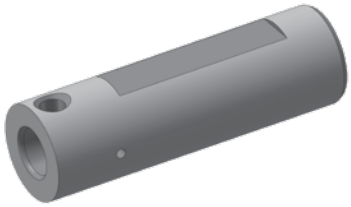

**Drehhalter Rundschaft**
Turning holder cylindrical

**Bestellnummer**
Order no. **WFMS.RS.20.065.IK**

**Drehhalter Rundschaft**
Turning holder cylindrical

**Bestellnummer**
Order no. **WFMS.RS.22.080.IK**

# THE EVOLUTION WF-MICRO System for DECO 10

driven and static toolholders

**Minimize the costs of cutting tools and increase productivity**

- **quick change**
- **presetting outside of machine**
- **highest runout**

Modulare Aggregatetechnik

# WFB Adapter

Katalog
WFB-02

# Inhaltsverzeichnis für WFB-Adapter

Table of contents for WFB-adapter
Table des matiérs pour WFB-adapteur


| Beschreibung / Description | Seite / Page |
|---|---|
| **WFB - Aufsatz**<br>WFB top piece | **11.2** |
| **Gebrauch und Wartung der WFB-Schnittstelle**<br>Handling and maintenance for WFB connection<br>Manutention et maintenance pour WFB connexion | **11.3** |
| **Produkt-Vorteile der WFB-Schnittstelle** | **11.4 - 11.5** |
| **Product advantages of WFB connection** | **11.6 - 11.7** |
| **WFB - Produktübersicht (Auszug)**<br>WFB - Product overview<br>WFB - Vue d'ensemble de produit | **11.8 - 11.9** |
| **WFB - Grundaufnahmen / Voreinstelladapter**<br>WFB - Master shanks<br>WFB - Module de base | **11.10 - 11.11** |
| **WFB - Weldon für Zylinderschäfte DIN 1835 B**<br>WFB - Weldon for parallel shanks<br>WFB - Weldon pour queues cylindriques | **11.12 - 11.13** |
| **WFB - WN für Zylinderschäfte DIN 1835 E**<br>WFB - Whistle Notch for parallel shanks<br>WFB - Whistle Notch pour queues cylindriques | **11.14 - 11.15** |
| **WFB - Schrumpffutter**<br>WFB - Shrink fit chucks<br>WFB - Mandrins de frettage | **11.16 - 11.17** |
| **Bedienungsanleitung für zweigeteilte Schrumpffutter System WFB**<br>Operation instructions for two split shrink fit chucks system WFB<br>Mode d'emploi pour deux divisé mandrins de frettage système WFB | **11.18** |
| **WFB - Sägeblattaufnahmen**<br>WFB - Tool holders for saw blade<br>WFB - Mandrins pour lame de scie | **11.19** |
| **WFB - Spannzangenfutter 8° Typ ER**<br>WFB - Collet chucks 8° type ER<br>WFB - Mandrins porte-pinces 8° type ER | **11.20 - 11.21** |
| **WFB - Softsynchro® mit IKZ**<br>WFB - Softsynchro® with internal cooling system<br>WFB - Softsynchro® avec arrosage central | **11.22** |
| **WFB - Hydro-Dehnspannfutter**<br>WFB - Hydraulic expansion chuck<br>WFB - Mandrin hydraulique | **11.23** |
| **WFB-Drehhalter W-T mit IKZ**<br>WFB - Turning tool holder W-T with internal cooling system<br>WFB - Rotatif porte-outil W-T avec arrosage central | **11.24** |
| **WFB-Klemmhalter W-T HORN Mini mit IKZ**<br>WFB - Toolholder W-T HORN Mini with internal cooling system<br>WFB - Porte-outil W-T HORN Mini avec arrosage central | **11.25** |

# Inhaltsverzeichnis für WFB-Adapter

Table of contents for WFB-adapter
Table des matiérs pour WFB-adapteur


| Beschreibung / Description | Seite / Page |
|---|---|
| **WFB-Klemmhalter W-T HORN Supermini® mit IKZ**<br>WFB - Toolholder W-T HORN Supermini® with internal cooling system<br>WFB - Porte-outil W-T HORN Supermini® avec arrosage central | **11.26** |
| **WFB - HORN Fräserschaft mit IKZ**<br>WFB - HORN milling shank with internal cooling<br>WFB - HORN arbre de coupe avec arrosage central | **11.27** |
| **WFB-Bohrstangenhalter**<br>WFB - Boring bar holder<br>WFB - Porte-outil pour barres d'alésage | **11.28** |
| **WFB - Aufsteckfräserdorne mit IKZ**<br>WFB - Milling machine arbors with internal cooling system<br>WFB - Mandrins porte-fraises avec arrosage central | **11.29** |
| **WFB - Verschlussstopfen**<br>WFB - Closing plug<br>WFB - Bouchon d'étanchéité | **11.30** |
| **WFB - Reduzierungen / Verlängerunge**<br>WFB - Reductions / Extensions<br>WFB - Réductions / Prolongations | **11.31** |
| **WFB - Kontrolldorne**<br>WFB - Test arbors<br>WFB - Mandrins de contrôle | **11.32** |
| **WFB - Bohrstangen-Rohlinge**<br>WFB - Boring bar-blanks<br>WFB - Barres à l'etat brut | **11.33** |
| **Spannzangen-Sätze mit Holzsockel System ER / ESX**<br>Collets System ER / ESX in wooden board<br>Pinces de serrage Systéme ER / ESX en socle de bois | **11.35** |
| **Spannzangen System ER / ESX ER11 / ER16 / ER20**<br>Collets System ER / ESX<br>Pinces de serrage Systéme ER / ESX | **11.36** |
| **Spannzangen System ER / ESX ER25 / ER32 / ER40**<br>Collets System ER / ESX<br>Pinces de serrage Systéme ER / ESX | **11.37** |
| **WFB - Ersatzteile / Zubehör**<br>WFB - Spare parts / Accessories<br>WFB - Pièces de rechange / Accessoires | **11.38** |


**WG = Warengruppe**
**Article group**
**Groupe de marchandise**

**WG 11 = _____**

**WG 35 = _____**

# WFB-Aufsatz

WFB top piece

**WG 35**

**Adapter >>GA<<**

**Vorsatzhalter Gr.I**
Tool post size I

**Adapter SK50**

**WFB-Adapter**

Der WFB-Adapter wird über 2 Kegelgewindestifte im WFB-Aufsatz fixiert und ist somit optimal positioniert.
The WFB-Adaper will be fixed in the WFB top piece via 2 threaded taper pins and is thus optimally positioned.

Durch die 100%-ige Einstellbarkeit der Adaptersysteme auf einem ZOLLER Einstell- und Messgerät reduziert sich die Maschinenrüstzeit nahezu gegen null. Teurer Maschinenstillstand kann somit vermieden werden.
Thanks to the excellent adjustability of the adapter systems on ZOLLER tool presetter and measuring machines setup times are reduced towards zero thus avoiding expensive machine downtimes.

| WFB top piece | Adapter >>GA<< | Vorsatzhalter Gr.I / Tool post size I | Adapter SK50 / ISO 50 |
|---|---|---|---|
| **WFB-Aufsatz** | **Art.-Nr. / Item no.** | **Art.-Nr. / Item no.** | **Art.-Nr. / Item no.** |
| WFB20-12 | WFB.6120.Y50 | WFB.6020.Y50 | WFB.6320.Y50 |
| WFB24-16 | WFB.6121.Y50 | WFB.6021.Y50 | WFB.6321.Y50 |
| WFB32-20 | WFB.6122.Y50 | WFB.6022.Y50 | WFB.6322.Y50 |
| WFB40-25 | WFB.6123.Y50 | WFB.6023.Y50 | WFB.6323.Y50 |
| WFB50-32 | WFB.6124.Y50 | WFB.6024.Y50 | WFB.6324.Y50 |

- ✓ Hohe Wechselgenauigkeiten (<2µ) und absoluter Formschluss
  High changing accuracy (<2µ) and absolute form fit
- ✓ Optimale Kraftübertragung und Steifigkeit durch kompakten Aufbau
  Optimum power transmission and rigidity thanks to a compact assembly
- ✓ Flexible Anwendungsmöglichkeiten, wie z. B. Spannzangenfutter, Weldon, Schrumpffutter u. v. a. m.
  Flexible application spectrum, e.g. collet chucks, weldon, shrink fit chucks and others
- ✓ Für angetriebene oder feststehende Werkzeuge geeignet
  Suitable for driven or stationary tools
- ✓ Einsetzbar in Dreh- und Fräsmaschinen und Bearbeitungszentren
  To be used in turning and milling machines and machining centres
- ✓ Einfacher und günstiger Spannmechanismus durch 2 Kegelgewindestifte
  Simple and convenient clamping mechanism via 2 threaded taper pins
- ✓ Geringe Rüstzeiten
  Reduced setup times
- ✓ Modular aufgebautes System, keine aufwändigen Sonderwerkzeughalter notwendig
  Modular designed system, no complex tool holders required

# Gebrauch und Wartung der WFB-Schnittstelle

Handling and maintenance for WFB connection
Manutention et maintenance pour WFB connexion

WG 35

**Hinweis zur Befestigung**
Zunächst einen Kegelgewindestift anziehen, dabei 1-2 mal lösen und wieder anziehen. Dadurch wird eine optimale Positionierung der Bauteile erreicht. Der 2. Kegelgewindestift wird nun ebenfalls (wie oben angeführt) angezogen. Empfohlene Drehmomente entnehmen Sie der unteren Tabelle.

**Advice for fixing**
First tighten one threaded taper pin, in doing so 1 or 2 times unscrew and tighten again. Thereby you get an optimum positioning of the components. The second threaded taper pin you will thighten with the same method. Recommended locking torque see in the lower table.

**Pflege und Wartung**
Die Oberflächen der Planflächen, der Kegelbohrung und Kegelzapfen sind vor Gebrauch zu reinigen und mit einem Öl-Schmierfilm zu versehen. Um eine optimale Befestigung und Lösbarkeit der Kegelgewindestifte zu erreichen, wird empfohlen die Kegelgewindestifte mit z.B. Molykote 1000 oder einer ähnlichen Heiss-Schraubenpaste zu behandeln.

**Support and maintenance**
The surface of the face, the cone drill and cone pin must be cleaning and lubricate with oil before using. To reach an optimum fixing and resolvability of the threaded taper pins, are recommended to use for example Molykote 1000 or something similar.

**Empfohlene Anzugsdrehmomente**
Recommended locking torque / Retenue couple

| Größe | Kegelgewindestifte | Anzugs-Drehmoment |
|---|---|---|
| WFB20-12 | M6 x 0,75 / Torx 15 Plus | 4 Nm |
| WFB20-12 | M6 x 1 / Torx T15 | 4 Nm |
| WFB24-16 | M8 x 1 / Torx T25 | 10 Nm |
| WFB32-20 | M10 x 1 | 20 Nm |

**Empfohlene Anzugsdrehmomente beim Einsatz von Kontrolldornen**
Recommended locking torque when running test arbors
Retenue couple à l'usage de Mandrins de contrôle

| Größe | Kegelgewindestifte | Anzugs-Drehmoment |
|---|---|---|
| WFB20-12 | M6 x 0,75 / Torx 15 Plus | 2 Nm |
| WFB20-12 | M6 x 1 / Torx T15 | 2 Nm |
| WFB24-16 | M8 x 1 / Torx T25 | 5 Nm |
| WFB32-20 | M10 x 1 | 10 Nm |

# Produkt-Vorteile der WFB-Schnittstelle

WG 35

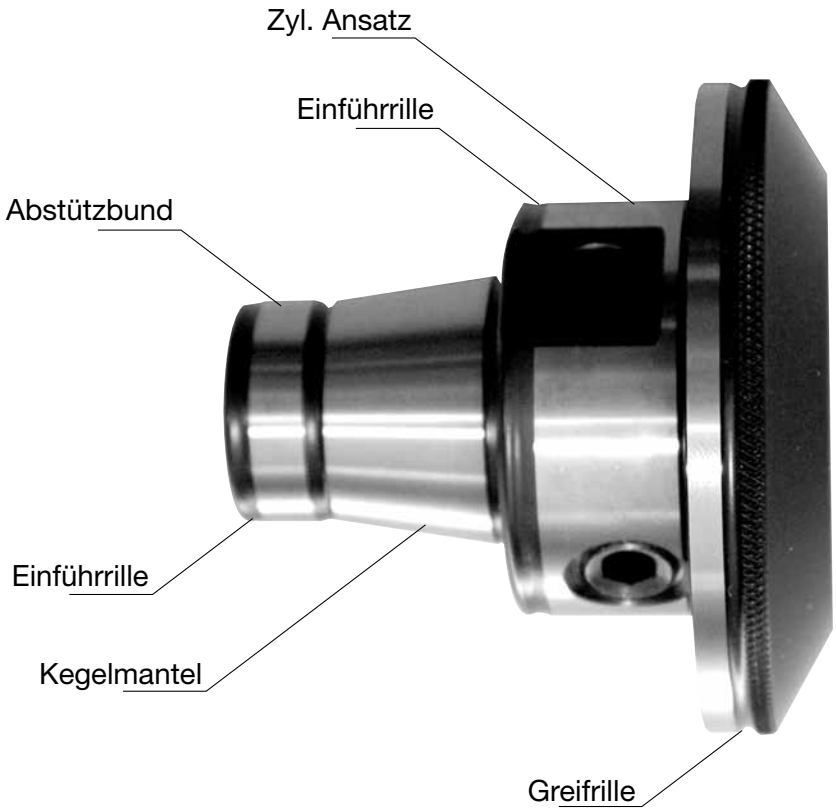


**Präzise**
Die Kegel/Plananlage mit zylindrischer Abstützung gewährleistet höchste Genauigkeit (2µ) und absoluten Form-schluß.

**Flexibel**
Spannzange, Weldon, Schrumpffutter, um nur die wichtigsten zu nennen, können alle in einen Grundhalter eingesetzt werden. Die Handhabung ist einfach und praxisgerecht.

**Kompakt**
Der extrem kompakte Aufbau gewährleistet eine optimale Kraftübertragung und Systemsteifigkeit. Daraus resultieren höhere Werkstückgenauigkeiten und verbesserte Produktivität.

**Orientierte Schneidenlage**
Auf Umschlag < 10 µ

**Reinigung**
Einfach, da überall leicht zugänglich.

# Produkt-Vorteile der WFB-Schnittstelle

WG 35

**Wirtschaftlich**
Sie benötigen weniger aufwändige, teure Sonderwerkzeughalter, die Werkzeugstandzeiten verlängern sich erheblich. Die Folge ist die deutliche Minimierung Ihrer Gesamtwerkzeug-kosten. Mit dem WFB-System helfen wir Ihnen Ihre Drehmaschine künftig wirklich wirtschaftlich einzusetzen, und teure Nebenzeiten einzusparen. Das neue modulare WFB-System von W&F eröffnet Ihnen hinsichtlich der Präzision und der Flexibilität völlig neue Dimensionen in der Fertigungstechnik.

**Spannmechanismus**
Äußerst günstig durch 2 Kegelgewindestifte.

**Schnell**
Durch den Einsatz von Werkzeugen, die parallel zur Maschinenlaufzeit voreingestellt werden, reduziert sich die Maschinenrüstzeit nahezu auf Null. Teure Maschinenstillstandzeiten werden vermieden.

**Universell**
Sowohl für angetriebene als auch für feststehende Werkzeuge, sowie auf Fräsmaschinen und BAZ einsetzbar.

**Schrumpfen**
Nach vorne und nach innen möglich.

# Product advantages of WFB connection

WG 35

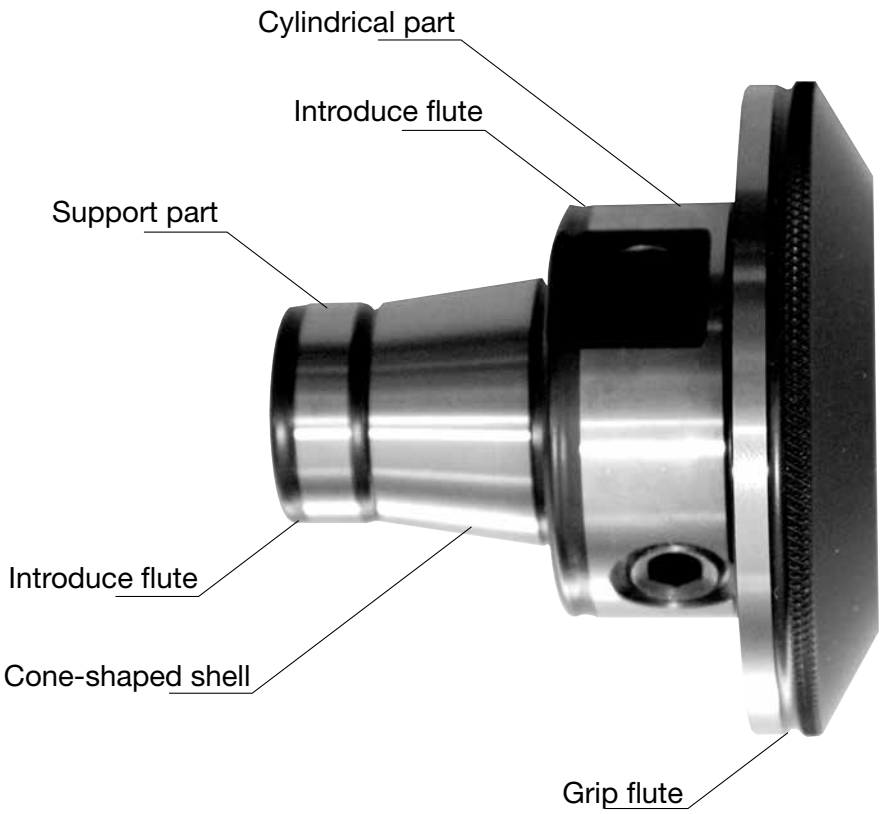


**Precise**
The taper/planned assets with cylindrical support guarantees highest precision (2µ) and completely form fit.

**Flexibel**
Collet, Weldon, schrink fit holder, etc., can be used in all master shanks. Easy and safe to handle. Collet, Weldon, schrink fit holder, etc., can be used in all master shanks. Easy and safe to handle.

**Compact**
The extrem compact construction guarantees an optimum load transmission and system rigidity. Out of it follow workpiece in higher precision and revised productivity.

**Optimized position of cutting edge**
Turnover < 10 µ

**Cleaning**
Simple because of good accessible.

# Product advantages of WFB connection

WG 35

Planned assets

**Economical**
You need less expensive special tool holders and the tool life will be extended. So you get a minimization of complete costs of tools. With the WFB-system we help you to use your turning machine profitable in the future and to save expensive non-productive time. The new modular WFB-system from W&F enable you with precision and flexibility new dimensions in the production technology.

**Gripping mechanism**
Exceedingly favorable through 2 threaded taper pins.

**Quick**
Pre-setting of tools can be effected out of the machine. Setting-up time will be nearly zero. Expensive machine dead time will be avoided.

**Universal**
Applicable in driven and static tool holder, as well as on milling machine and machining center.

**Shrinking**
Forward and inward possible.

# WFB - Produktübersicht (Auszug)

WFB - Product overview
WFB - Vue d'ensemble de produit

**WG 35**

**WFB - Aggregate**
WFB - Aggregates
WFB - Agrégats

**Axial**

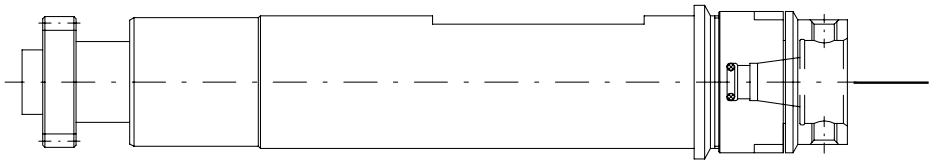

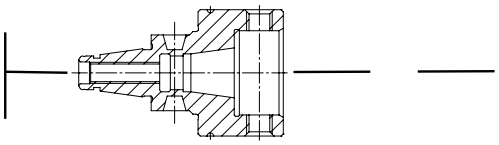

**WFB - Verlängerungen**
WFB - Extensions
WFB - Prolongations

**Radial**

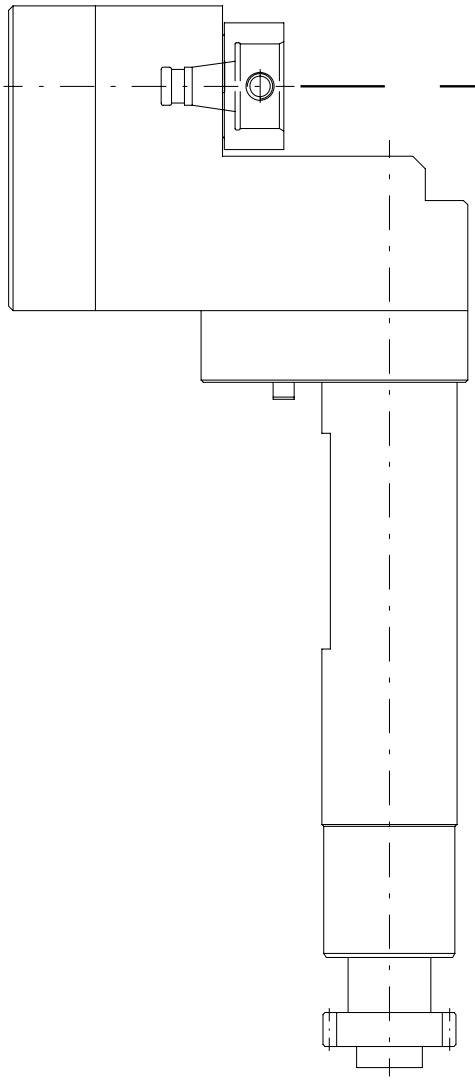

# WFB - Produktübersicht (Auszug)

WFB - Product overview
WFB - Vue d'ensemble de produit

**WG 35**

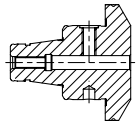

**WFB - Weldon / Whistle Notch für Zylinderschäfte DIN 1835 B / E**
WFB - Weldon / Whistle Notch for parallel shanks
WFB - Weldon / Whistle Notch pour queues cylindriques

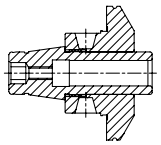

**WFB - Schrumpffutter**
WFB - Shrink fit chucks
WFB - Mandrins de frettage

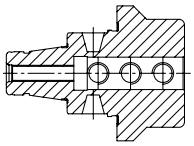

**WFB - Bohrstangenhalter**
WFB - Boring bar holder
WFB - Porte-outil pour barres d'alésage

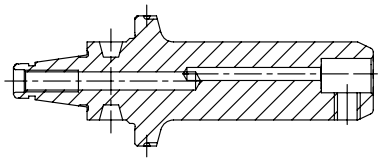

**WFB - Klemmhalter W-T HORN Supermini® mit IKZ**
WFB - Toolholder W-T HORN Supermini® with internal cooling system
WFB - Porte-outil W-T HORN Supermini® avec arrosage central

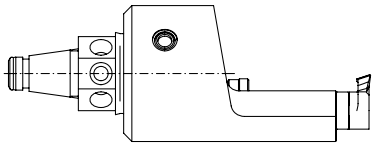

**WFB - Klemmhalter W-T HORN Mini mit IKZ**
WFB - Toolholder W-T HORN Mini with internal cooling system
WFB - Porte-outil W-T HORN Mini avec arrosage central

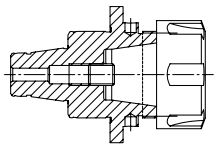

**WFB - Spannzangenfutter 8° Typ ER**
WFB - Collet chucks 8° type ER
WFB - Mandrins porte-pinces 8° type ER

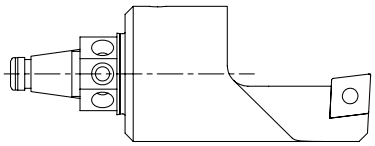

**WFB - Drehhalter W-T mit IKZ**
WFB - Turning tool holder W-T with internal cooling system
WFB - Rotatif porte-outil W-T avec arrosage central

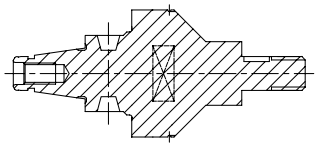

**WFB - Sägeblattaufnahmen**
WFB - Tool holders for saw blade
WFB - Mandrins pour lame de scie

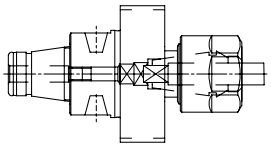

**WFB - Softsynchro® mit IKZ**
WFB - Softsynchro® with internal cooling system
WFB - Softsynchro® avec arrosage central

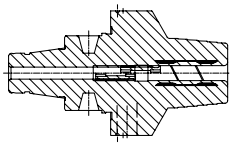

**WFB - Hydro-Dehnspannfutter**
WFB - Hydraulic expansion chuck
WFB - Mandrin hydraulique

# WFB - Grundaufnahmen / Voreinstelladapter

WFB - Master shanks
WFB - Module de base

**WG 35**

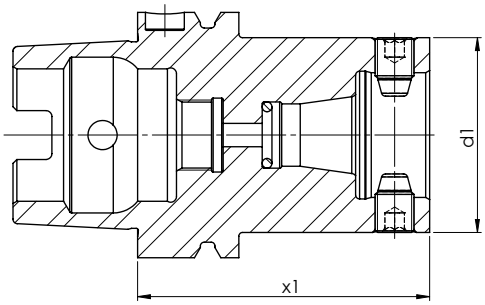


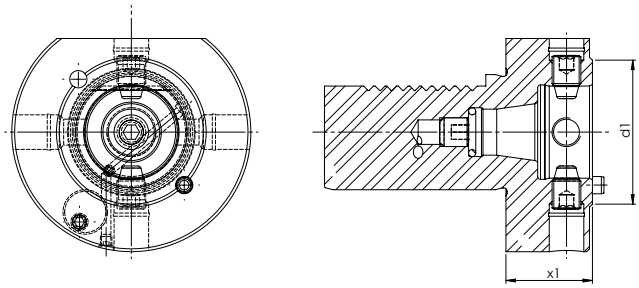

| Size<br>Grandeur<br>**Größe** | **Type**<br>Type<br>**Typ** | [mm]<br><br>**d1** | [mm]<br><br>**x1** | Order no.<br>Nº de Code<br>**Bestellnummer** |
|---|---|---|---|---|
| WFB20-12 | HSK 63 | 30 | 55 | WFB.020.H63 |
| WFB24-16 | HSK 63 | 40 | 65 | WFB.024.H63 |
| WFB32-20 | HSK 40 | 50 | 40 | WFB.032.H40 |
| WFB32-20 | HSK 63 | 50 | 75 | WFB.032.H63 |
| WFB32-20 | HSK 100 | 50 | 75 | WFB.032.H100 |

| Size<br>Grandeur<br>**Größe** | **Type**<br>Type<br>**Typ** | [mm]<br><br>**d1** | [mm]<br><br>**x1** | Order no.<br>Nº de Code<br>**Bestellnummer** |
|---|---|---|---|---|
| WFB20-12 | VDI 30 | 30 | 28 | WFB.020.V30 |
| WFB24-16 | VDI 30 | 40 | 28 | WFB.024.V30 |
| WFB32-20 | VDI 25 | 50 | 28 | WFB.032.V25 |
| WFB32-20 | VDI 30 | 50 | 28 | WFB.032.V30 |
| WFB32-20 | VDI 40 | 50 | 30 | WFB.032.V40 |

# WFB - Grundaufnahmen / Voreinstelladapter

WFB - Master shanks
WFB - Module de base

**WG 35**

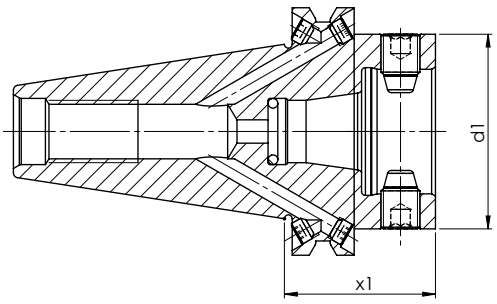


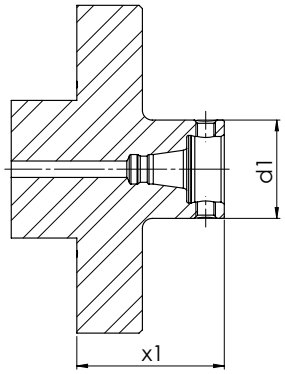

| Size<br>Grandeur<br>**Größe** | **Type**<br>Type<br>**Typ** | [mm]<br><br>**d1** | [mm]<br><br>**x1** | Order no.<br>Nº de Code<br>**Bestellnummer** |
|---|---|---|---|---|
| WFB20-12 | SK 40 | 30 | 40 | WFB.020.S40 |
| WFB20-12 | SK 50 | 30 | 40 | WFB.020.S50 |
| WFB24-16 | SK 40 | 40 | 40 | WFB.024.S40 |
| WFB24-16 | SK 50 | 40 | 40 | WFB.024.S50 |
| WFB32-20 | SK 40 | 50 | 40 | WFB.032.S40 |
| WFB32-20 | SK 50 | 50 | 40 | WFB.032.S50 |

| Size<br>Grandeur<br>**Größe** | **Type**<br>Type<br>**Typ** | [mm]<br><br>**d1** | [mm]<br><br>**x1** | Order no.<br>Nº de Code<br>**Bestellnummer** |
|---|---|---|---|---|
| WFB20-12 | Z01 | 30 | 45 | WFB.020.SHT.Z01 |
| WFB24-16 | Z01 | 40 | 45 | WFB.024.SHT.Z01 |
| WFB32-20 | Z01 | 50 | 65 | WFB.032.SHT.Z01 |

# WFB - Weldon für Zylinderschäfte DIN 1835 B

WFB - Weldon for parallel shanks
WFB - Weldon pour queues cylindriques

**WG 35**

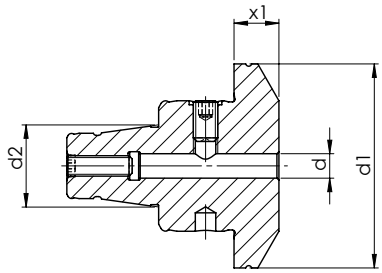


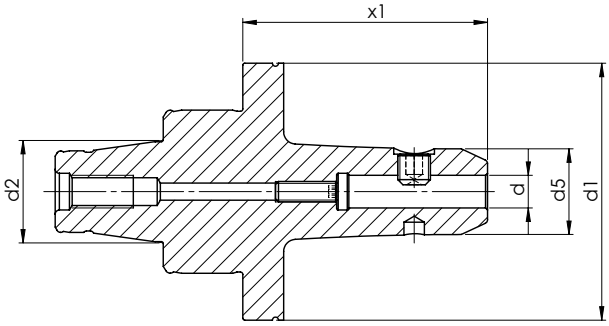

**Verwendung:** Zum Spannen von Werkzeugen mit Zylinderschaft DIN 1835 Form B.
**Lieferumfang:** Mit eingebauter Spannschraube

**Application:** For clamping tools with parallel shank DIN 1835 form B.
**Scope of supply:** Weldon end mill adaptor incl. locking screw

**Application:** Pour montage d'outils à queue cylindrique DIN 1835 forme B.
**Livraison:** Mandrin à pinces Weldon compris vis de serrage

| Size<br>Grandeur<br>**Größe** | [mm]<br><br>**d** | [mm]<br><br>**d1** | [mm]<br><br>**d2** | [mm]<br><br>**d5** | [mm]<br><br>**x1** | Order no.<br>Nº de Code<br>**Bestellnummer** |
|---|---|---|---|---|---|---|
| WFB 20-12 | 3 | 29 | 12 | 12 | 25 | WFB.203.025K |
| WFB 20-12 | 4 | 29 | 12 | 14 | 25 | WFB.204.025K |
| WFB 20-12 | 6 | 29 | 12 | 17 | 16 | WFB.206.016K |
| WFB 20-12 | 6 | 29 | 12 | 17 | 27 | WFB.206.027K |
| WFB 20-12 | 6 | 30 | 12 | 17 | 27 | WFB.206.027T |
| WFB 20-12 | 6 | 30 | 12 | 17 | 43 | WFB.206.043.S |
| WFB 20-12 | 6 | 30 | 12 | 25 | 42,5 | WFB.206.043T |
| WFB 20-12 | 8 | 29 | 12 | 21 | 16 | WFB.208.016K |
| WFB 20-12 | 8 | 29 | 12 | 21 | 27 | WFB.208.027K |
| WFB 20-12 | 8 | 30 | 12 | 21 | 27 | WFB.208.027T |
| WFB 20-12 | 8 | 30 | 12 | 25 | 42,5 | WFB.208.043T |
| WFB 20-12 | 10 | 29 | 12 | 24 | 37 | WFB.210.037K |
| WFB 20-12 | 10 | 30 | 12 | 24 | 37 | WFB.210.037T |
| WFB 20-12 | 10 | 30 | 12 | 25 | 42,5 | WFB.210.043T |

# WFB - Weldon für Zylinderschäfte DIN 1835 B

WFB - Weldon for parallel shanks
WFB - Weldon pour queues cylindriques

**WG 35**

| Size<br>Grandeur<br>**Größe** | [mm]<br><br>**d** | [mm]<br><br>**d1** | [mm]<br><br>**d2** | [mm]<br><br>**d5** | [mm]<br><br>**x1** | Order no.<br>Nº de Code<br>**Bestellnummer** |
|---|---|---|---|---|---|---|
| WFB 20-12 | 16 | 30 | 12 | 33 | 55 | WFB.216.055 |
| WFB 24-16 | 6 | 40 | 16 | 11 | 14 | WFB.246.014T |
| WFB 24-16 | 6 | 40 | 16 | 17 | 27 | WFB.246.027T |
| WFB 24-16 | 8 | 40 | 16 | 21 | 27 | WFB.248.027T |
| WFB 24-16 | 10 | 40 | 16 | 17 | 15 | WFB.241.015T |
| WFB 24-16 | 10 | 40 | 16 | 24 | 25 | WFB.241.025T |
| WFB 24-16 | 12 | 40 | 16 | 27 | 30 | WFB.241.230T |
| WFB 32-20 | 4 | 50 | 20 | 14 | 28 | WFB.304.028 |
| WFB 32-20 | 6 | 50 | 20 | - | 11 | WFB.306.011 |
| WFB 32-20 | 6 | 50 | 20 | 17 | 28 | WFB.306.028T |
| WFB 32-20 | 6 | 50 | 20 | 17 | 40 | WFB.306.040 |
| WFB 32-20 | 6 | 50 | 20 | 17 | 60 | WFB.306.060 |
| WFB 32-20 | 8 | 50 | 20 | - | 11 | WFB.308.011 |
| WFB 32-20 | 8 | 50 | 20 | 21 | 28 | WFB.308.028T |
| WFB 32-20 | 8 | 50 | 20 | 21 | 40 | WFB.308.040 |
| WFB 32-20 | 8 | 50 | 20 | 21 | 60 | WFB.308.060 |
| WFB 32-20 | 10 | 50 | 20 | - | 11 | WFB.310.011 |
| WFB 32-20 | 10 | 50 | 20 | 24 | 25 | WFB.310.025T |
| WFB 32-20 | 10 | 50 | 20 | 24 | 35 | WFB.310.035 |
| WFB 32-20 | 10 | 50 | 20 | 24 | 60 | WFB.310.060 |
| WFB 32-20 | 12 | 50 | 20 | 27 | 14 | WFB.312.014T |
| WFB 32-20 | 12 | 50 | 20 | - | 15 | WFB.312.015 |
| WFB 32-20 | 12 | 50 | 20 | 27 | 35 | WFB.312.035 |
| WFB 32-20 | 12 | 50 | 20 | 27 | 60 | WFB.312.060 |
| WFB 32-20 | 14 | 50 | 20 | 50 | 31 | WFB.314.031 |
| WFB 32-20 | 14 | 50 | 20 | 29 | 60 | WFB.314.060 |
| WFB 32-20 | 16 | 50 | 20 | 50 | 44 | WFB.316.044 |
| WFB 32-20 | 16 | 50 | 20 | 35 | 60 | WFB.316.060 |
| WFB 32-20 | 18 | 50 | 20 | 50 | 44 | WFB.318.044 |
| WFB 32-20 | 18 | 50 | 20 | 35 | 60 | WFB.318.060 |
| WFB 32-20 | 20 | 50 | 20 | 50 | 47 | WFB.320.047 |
| WFB 32-20 | 20 | 50 | 20 | 39 | 60 | WFB.320.060 |
| WFB 32-20 | 25 | 50 | 20 | 47 | 60 | WFB.325.060 |

# WFB - WN
# für Zylinderschäfte DIN 1835 E

WFB - Whistle Notch for parallel shanks
WFB - Whistle Notch pour queues cylindriques

**WG 35**

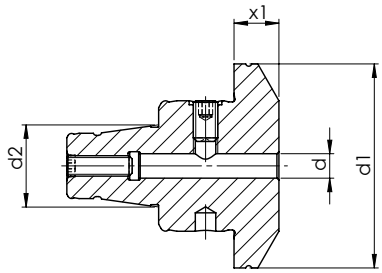


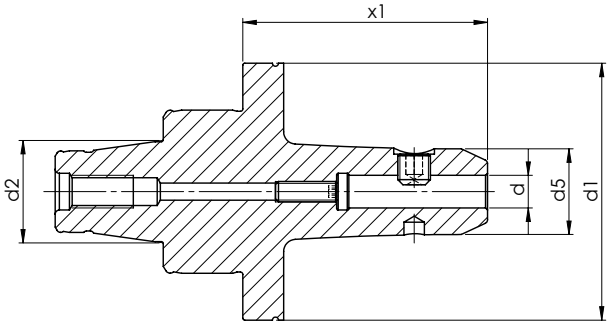

**Verwendung:** Zum Spannen von Werkzeugen mit Zylinderschaft DIN 1835 Form E
**Lieferumfang:** Mit eingebauter Spann- und Anschlagschraube

**Application:** For clamping tools with parallel shank DIN 1835 form E
**Scope of supply:** Weldon end mill adaptor incl. locking screw and adjusting screw

**Application:** Pour montage d'outils à queue cylindrique DIN 1835 forme E
**Livraison:** Mandrin à pinces Weldon compris vis de serrage et vis de réglage

| Size<br>Grandeur<br>**Größe** | [mm]<br><br>**d** | [mm]<br><br>**d1** | [mm]<br><br>**d2** | [mm]<br><br>**d5** | [mm]<br><br>**x1** | Order no.<br>Nº de Code<br>**Bestellnummer** |
|---|---|---|---|---|---|---|
| WFB20-12 | 6 | 30 | 12 | 17 | 27 | WFB.206.127T |
| WFB20-12 | 6 | 29 | 12 | 17 | 27 | WFB.206.127K |
| WFB20-12 | 6 | 30 | 12 | 25 | 42,5 | WFB.206.143T |
| WFB20-12 | 8 | 29 | 12 | 21 | 27 | WFB.208.127K |
| WFB20-12 | 8 | 30 | 12 | 21 | 27 | WFB.208.127T |
| WFB20-12 | 8 | 30 | 12 | 25 | 42,5 | WFB.208.143T |
| WFB20-12 | 8 | 29 | 12 | 25 | 42,5 | WFB.208.143K |
| WFB20-12 | 10 | 29 | 12 | 24 | 37 | WFB.210.137K |
| WFB20-12 | 10 | 30 | 12 | 24 | 37 | WFB.210.137T |
| WFB20-12 | 10 | 30 | 12 | 25 | 42,5 | WFB.210.143T |
| WFB24-16 | 6 | 40 | 16 | 11 | 14 | WFB.246.114T |
| WFB24-16 | 6 | 40 | 16 | 17 | 27 | WFB.246.127T |
| WFB24-16 | 8 | 40 | 16 | 21 | 27 | WFB.248.127T |
| WFB24-16 | 10 | 40 | 16 | 17 | 15 | WFB.241.115T |

# WFB - WN
# für Zylinderschäfte DIN 1835 E

WFB - Whistle Notch for parallel shanks
WFB - Whistle Notch pour queues cylindriques

**WG 35**

| Size<br>Grandeur<br>**Größe** | [mm]<br><br>**d** | [mm]<br><br>**d1** | [mm]<br><br>**d2** | [mm]<br><br>**d5** | [mm]<br><br>**x1** | Order no.<br>Nº de Code<br>**Bestellnummer** |
|---|---|---|---|---|---|---|
| WFB24-16 | 10 | 40 | 16 | 24 | 25 | WFB.241.125T |
| WFB24-16 | 12 | 40 | 16 | 27 | 30 | WFB.241.330T |
| WFB32-20 | 4 | 50 | 20 | 14 | 28 | WFB.304.128 |
| WFB32-20 | 6 | 50 | 20 | - | 11 | WFB.306.111 |
| WFB32-20 | 6 | 50 | 20 | 17 | 28 | WFB.306.128T |
| WFB32-20 | 6 | 50 | 20 | 17 | 40 | WFB.306.140 |
| WFB32-20 | 6 | 50 | 20 | 17 | 60 | WFB.306.160 |
| WFB32-20 | 8 | 50 | 20 | - | 11 | WFB.308.111 |
| WFB32-20 | 8 | 50 | 20 | 21 | 40 | WFB.308.140 |
| WFB32-20 | 8 | 50 | 20 | 21 | 60 | WFB.308.160 |
| WFB32-20 | 8 | 50 | 20 | 21 | 28 | WFB.308.128T |
| WFB32-20 | 10 | 50 | 20 | - | 11 | WFB.310.111 |
| WFB32-20 | 10 | 50 | 20 | 24 | 25 | WFB.310.125T |
| WFB32-20 | 10 | 50 | 20 | 24 | 35 | WFB.310.135 |
| WFB32-20 | 10 | 50 | 20 | 24 | 60 | WFB.310.160 |
| WFB32-20 | 12 | 50 | 20 | 27 | 14 | WFB.312.114T |
| WFB32-20 | 12 | 50 | 20 | - | 15 | WFB.312.115 |
| WFB32-20 | 12 | 50 | 20 | 27 | 35 | WFB.312.135 |
| WFB32-20 | 12 | 50 | 20 | 27 | 60 | WFB.312.160 |
| WFB32-20 | 14 | 50 | 20 | 50 | 31 | WFB.314.131 |
| WFB32-20 | 14 | 50 | 20 | 29 | 60 | WFB.314.160 |
| WFB32-20 | 16 | 50 | 20 | 50 | 44 | WFB.316.144 |
| WFB32-20 | 16 | 50 | 20 | 35 | 60 | WFB.316.160 |
| WFB32-20 | 18 | 50 | 20 | 50 | 44 | WFB.318.144 |
| WFB32-20 | 18 | 50 | 20 | 35 | 60 | WFB.318.160 |
| WFB32-20 | 20 | 50 | 20 | 50 | 47 | WFB.320.147 |
| WFB32-20 | 20 | 50 | 20 | 39 | 60 | WFB.320.160 |
| WFB32-20 | 25 | 50 | 20 | 47 | 60 | WFB.325.160 |

# WFB - Schrumpffutter

WFB - Shrink fit chucks
WFB - Mandrins de frettage

**WG 35**

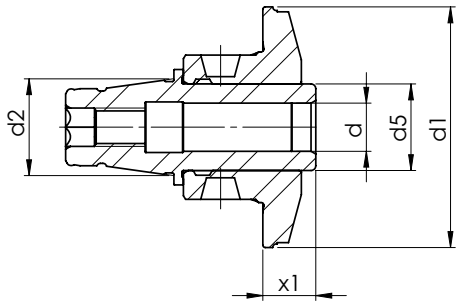

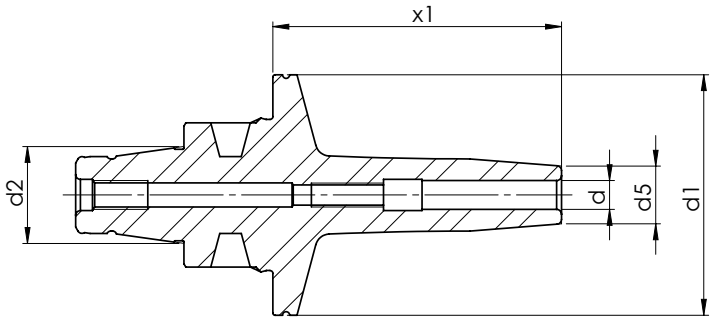

| Size<br>Grandeur<br>**Größe** | [mm]<br><br>**d** | [mm]<br><br>**d1** | [mm]<br><br>**d2** | [mm]<br><br>**d5** | [mm]<br><br>**x1** | Order no.<br>Nº de Code<br>**Bestellnummer** |
|---|---|---|---|---|---|---|
| WFB20-12 | 3 | 30 | 12 | 10 | 37 | WFB.203.037.SFR |
| WFB20-12 | 3 | 30 | 12 | 10 | 51 | WFB.203.051.SFR |
| WFB20-12 | 3 | 30 | 12 | 9 | 17 | WFB.S20.003.017.SF* |
| WFB20-12 | 3 | 29 | 12 | 9 | 17 | WFB.S20.003.017.SFK* |
| WFB20-12 | 4 | 30 | 12 | 13 | 35 | WFB.204.035.SFR |
| WFB20-12 | 4 | 30 | 12 | 12 | 50 | WFB.204.050.SFR |
| WFB20-12 | 4 | 30 | 12 | 9 | 17 | WFB.S20.004.017.SF* |
| WFB20-12 | 4 | 29 | 12 | 9 | 17 | WFB.S20.004.017.SFK* |
| WFB20-12 | 6 | 30 | 12 | 13 | 32 | WFB.206.032.SFR |
| WFB20-12 | 6 | 30 | 12 | 15 | 47 | WFB.206.047.SFR |
| WFB20-12 | 6 | 30 | 12 | 14 | 17 | WFB.S20.006.017.SF* |
| WFB20-12 | 6 | 30 | 12 | 14 | 27 | WFB.S20.006.027.SF* |
| WFB20-12 | 6 | 29 | 12 | 14 | 27 | WFB.S20.006.027.SFK* |
| WFB20-12 | 8 | 30 | 12 | 15 | 30 | WFB.208.030.SFR |
| WFB20-12 | 8 | 30 | 12 | 17 | 45 | WFB.208.045.SFR |

*** = Zweigeteilte Ausführung / Two split construction / Deux divisé construction**

# WFB - Schrumpffutter

WFB - Shrink fit chucks
WFB - Mandrins de frettage

**WG 35**

| Size<br>Grandeur<br>**Größe** | [mm]<br><br>**d** | [mm]<br><br>**d1** | [mm]<br><br>**d2** | [mm]<br><br>**d5** | [mm]<br><br>**x1** | Order no.<br>Nº de Code<br>**Bestellnummer** |
|---|---|---|---|---|---|---|
| WFB20-12 | 8 | 30 | 12 | 14 | 20 | WFB.S20.008.020.SF* |
| WFB20-12 | 8 | 30 | 12 | 14 | 27 | WFB.S20.008.027.SF* |
| WFB20-12 | 8 | 29 | 12 | 14 | 27 | WFB.S20.008.027.SFK* |
| WFB20-12 | 10 | 30 | 12 | 16 | 27 | WFB.S20.010.027.SF* |
| WFB20-12 | 12 | 30 | 12 | 18 | 35 | WFB.2H0.D12.SFR |
| WFB24-16 | 3 | 40 | 16 | 13 | 34 | WFB.243.034.SFR |
| WFB24-16 | 4 | 40 | 16 | 13 | 34 | WFB.244.034.SFR |
| WFB24-16 | 6 | 40 | 16 | 13 | 30 | WFB.246.030.SFR |
| WFB24-16 | 8 | 40 | 16 | 14 | 30 | WFB.248.030.SFR |
| WFB24-16 | 10 | 40 | 16 | 17 | 30 | WFB.241.030.SFR |
| WFB32-20 | 3 | 50 | 20 | 13 | 37 | WFB.303.037SFR |
| WFB32-20 | 3 | 50 | 20 | 10 | 60 | WFB.303.060SFR |
| WFB32-20 | 3 | 50 | 20 | - | 11 | WFB.S32.003.011.SF* |
| WFB32-20 | 3 | 50 | 20 | 13 | 37 | WFB.S32.003.037.SF* |
| WFB32-20 | 4 | 50 | 20 | 13 | 35 | WFB.304.035.SFR |
| WFB32-20 | 4 | 50 | 20 | 12 | 60 | WFB.304.060SFR |
| WFB32-20 | 4 | 50 | 20 | - | 11 | WFB.S32.004.011.SF* |
| WFB32-20 | 5 | 50 | 20 | 13 | 60 | WFB.305.060SFR |
| WFB32-20 | 5 | 50 | 20 | - | 11 | WFB.S32.005.011.SF* |
| WFB32-20 | 6 | 50 | 20 | 13 | 32 | WFB.306.032.SFR |
| WFB32-20 | 6 | 50 | 20 | 15 | 60 | WFB.306.060SFR |
| WFB32-20 | 6 | 50 | 20 | - | 11 | WFB.S32.006.011.SF* |
| WFB32-20 | 6 | 50 | 20 | 13 | 32 | WFB.S32.006.032.SF* |
| WFB32-20 | 8 | 50 | 20 | 15 | 30 | WFB.308.030.SFR |
| WFB32-20 | 8 | 50 | 20 | 17 | 60 | WFB.308.060SFR |
| WFB32-20 | 8 | 50 | 20 | - | 11 | WFB.S32.008.011.SF* |
| WFB32-20 | 8 | 50 | 20 | 15 | 30 | WFB.S32.008.030.SF* |
| WFB32-20 | 10 | 50 | 20 | 22 | 60 | WFB.310.060SFR |
| WFB32-20 | 10 | 50 | 20 | 18 | 11 | WFB.S32.010.011.SF* |
| WFB32-20 | 10 | 50 | 20 | 18 | 25 | WFB.S32.010.025.SF* |
| WFB32-20 | 12 | 50 | 20 | 26 | 60 | WFB.312.030.SFR |
| WFB32-20 | 12 | 50 | 20 | 25 | 60 | WFB.312.060SFR |
| WFB32-20 | 12 | 50 | 20 | 18 | 11 | WFB.S32.012.011.SF* |
| WFB32-20 | 12 | 50 | 20 | 18 | 11 | WFB.S32.012.011.SF.* |
| WFB32-20 | 12 | 50 | 20 | 18 | 30 | WFB.S32.012.030.SF* |
| WFB32-20 | 14 | 50 | 20 | 30 | 60 | WFB.314.060.SFR |
| WFB32-20 | 14 | 50 | 20 | 27 | 25 | WFB.S32.014.025.SF* |
| WFB32-20 | 16 | 50 | 20 | 30 | 60 | WFB.316.060SFR |
| WFB32-20 | 16 | 50 | 20 | 27 | 25 | WFB.S32.016.025.SF* |
| WFB32-20 | 16 | 50 | 20 | 27 | 32 | WFB.S32.016.032.SF* |

*** = Zweigeteilte Ausführung / Two split construction / Deux divisé construction**

# Bedienungsanleitung für zweigeteilte Schrumpffutter System WFB

Operation instructions for two split shrink fit chucks system WFB
Mode d'emploi pour deux divisé mandrins de frettage système WFB

**WG 35**

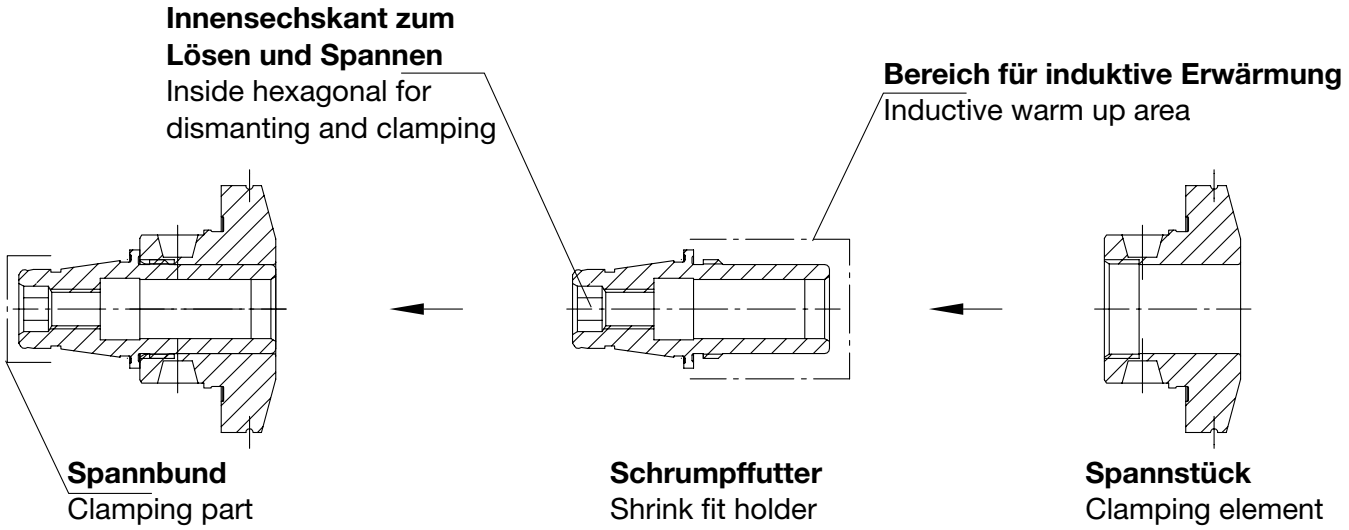


**Funktionsweise:**
Mode of operation:

**1. WFB Schrumpfadapter demontieren. Zum Lösen und Spannen darf nur der im Schrumpffutter eingebrachte Sechskant genutzt werden.**
WFB shrink fit chucks disassemble. Please use the inside hexagonal for dismantling and clamping.

**2. Schrumpfadapter am Spannbund in Grundaufnahme (Spannzangenfutter) aufnehmen.**
Put the shrink adapter with clamping sight in the collet chuck from the machine.

**3. Induktiv erwärmen und Schneidwerkzeug einschrumpfen.**
Inductive heat up and shrinking cutting tools.

**4. Schrumpffutter abkühlen lassen.**
Let cool down the shrink adapter.

**5. Spannstück und Schrumpffutter zusammen montieren.**
Clamping element and shrink fit holder must be mounting together.

**Wichtiger Hinweis:**
Important information:

**WFB Schrumpffutter in kurzer Ausführung bestehen aus dem eigentlichen Schrumpffutter und dem Spannstück. Beide Teile werden in zusammengebauten Zustand ausgeliefert und sind mit der gleichen Kennung beschriftet. Achtung! Nur Teile mit gleicher Kennung dürfen als Adapter montiert werden.**
WFB shrink fit holder in short construction consists of shrink fit holder and clamping element. Both element will be delivered in assembled condition and they are marked with the same identification. Attention! Only parts with the same identification may be assembled as adapter.

# WFB - Sägeblattaufnahmen

WFB - Tool holders for saw blade
WFB - Mandrins pour lame de scie

**WG 35**

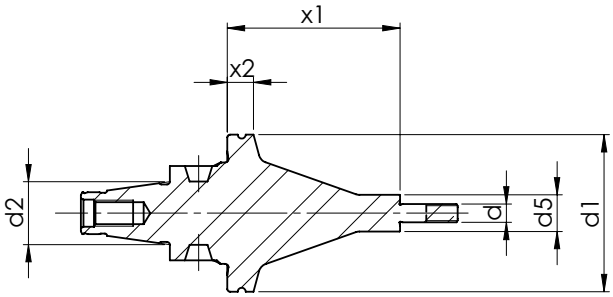


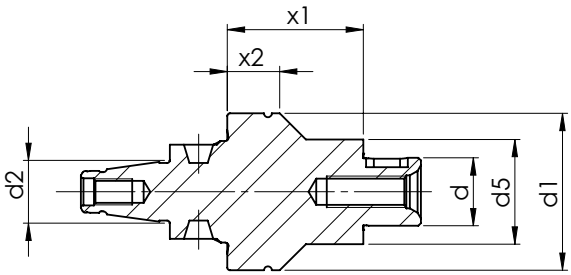

**Lieferumfang:**
Bei Ø 3,5 mm inkl. 1 St. M3,5x0,6-Mutter,
je 1 St. Fräsdornring 3,5x6,5x1 - 3,5x6,5x2 mm.

Bei Ø 5 mm inkl. 1 St. M5-Mutter,
1 St. Fräsdornring 5x9x1 mm, 2 St. Fräsdornringe 5x9x2 mm.

Bei Ø 8 mm inkl. 1 St. M8x1-Mutter, 1 St. Passfeder 2x2x6 mm,
je 1 St. Fräsdornring 8x14x1 - 8x14x3 - 8x14x4 mm.

Bei Ø 10 mm inkl. 1 St. M10x1-Mutter, 1 St. Passfeder 3x3x7 mm,
je 1 St. Fräsdornring 10x16x0,5 - 10x16x1 - 10x16x3 - 10x16x5 mm.

Bei Ø 13 mm inkl. 1 St. Fräseranzugsschraube, 1 St. Passfeder 4x4x8 mm,
je 1 St. Fräsdornring 13x21x0,5 - 13x22x1 - 13x22x3 - 13x22x5 mm.

Bei Ø 16 mm inkl. 1 St. Fräseranzugsschraube, 1 St. Passfeder 4x4x10 mm,
je 1 St. Fräsdornring 16x25x1 - 16x27x2 - 16x27x3 - 16x27x10 mm.

Bei Ø 22 mm inkl. 1 St. Fräseranzugsschraube, 1 St. Passfeder 6x6x14 mm,
je 1 St. Fräsdornring 22x33x1 - 22x34x2 - 22x34x6 - 22x34x10 mm.

| Size<br>Grandeur<br>**Größe** | [mm]<br><br>**d** | [mm]<br><br>**d1** | [mm]<br><br>**d2** | [mm]<br><br>**d5** | [mm]<br><br>**x1** | [mm]<br><br>**x2** | Order no.<br>N° de Code<br>**Bestellnummer** |
|---|---|---|---|---|---|---|---|
| WFB20-12 | 3,5 | 30 | 12 | 7 | 33 | 5 | WFB.035A.2033 |
| WFB20-12 | 5 | 30 | 12 | 10 | 33 | 5 | WFB.05A.2033 |
| WFB20-12 | 8 | 30 | 12 | 15 | 26 | 10 | WFB.08A.2026 |
| WFB20-12 | 10 | 30 | 12 | 17 | 26 | 10 | WFB.10A.2026 |
| WFB20-12 | 13 | 30 | 12 | 20 | 26 | 10 | WFB.13A.2026 |
| WFB20-12 | 16 | 30 | 12 | 24 | 26 | 10 | WFB.16A.2026 |
| WFB32-20 | 22 | 30 | 20 | 34 | 26 | 10 | WFB.22A.2026 |

# WFB - Spannzangenfutter 8° Typ ER

WFB - Collet chucks 8° type ER
WFB - Mandrins porte-pinces 8° type ER

**WG 35**

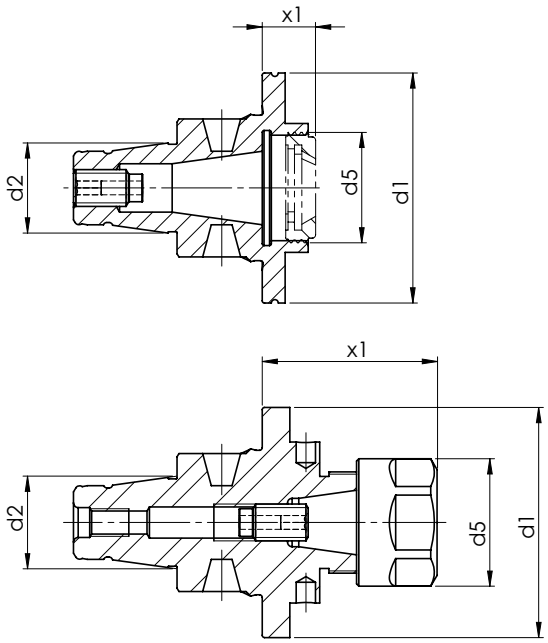

**Verwendung:** Zur Aufnahme von Werkzeugen mit Zylinderschaft in Spannzangen DIN 6499.
**Lieferumfang:** Fräserspannfutter mit Spannmutter und Anschlagschraube.
**Spannzangen:** Siehe Seite 11.35

**Application:** To hold tools with parallel shank in collets DIN 6499
**Scope of supply:** Collet chucks with collet nut and adjusting screw.
**Collets:** See page 11.35

**Application:** Pour montage d'outils à queue cylindrique en pinces DIN 6499.
**Livraison:** Mandrins à pinces, ecrous de serrage, vis de règlage. **Pinces:** Voir page 11.35

| Size<br>Grandeur<br>**Größe** | **Type**<br>Type<br>**Typ** | [mm]<br><br>**d1** | [mm]<br><br>**d2** | [mm]<br><br>**d5** | [mm]<br><br>**x1** | Order no.<br>Nº de Code<br>**Bestellnummer** |
|---|---|---|---|---|---|---|
| WFB20-12 | ER8 M | 30 | 12 | 12 | 25 | WFB.208.025MINI |
| WFB20-12 | ER8 M | 30 | 12 | 12 | 57 | WFB.208.057MINI |
| WFB20-12 | ER11 | 30 | 12 | 16 | 25 | WFB.211.025MINI |
| WFB20-12 | ER11 A | 29 | 12 | 18 | 10 | WFB.211.A10K |
| WFB20-12 | ER11 A | 30 | 12 | 18 | 10 | WFB.211.A10T |
| WFB20-12 | ER11 | 29 | 12 | 19 | 25 | WFB.211.025K |
| WFB20-12 | ER11 | 30 | 12 | 19 | 25 | WFB.211.025T |
| WFB20-12 | ER11 | 30 | 12 | 19 | 45 | WFB.211.045T |
| WFB20-12 | ER16 M | 30 | 12 | 22 | 28 | WFB.216.028MINI |
| WFB20-12 | ER16 | 29 | 12 | 28 | 28 | WFB.216.028K |
| WFB20-12 | ER16 | 30 | 12 | 28 | 28 | WFB.216.028T |
| WFB20-12 | ER16 | 30 | 12 | 28 | 43 | WFB.216.043T |
| WFB20-12 | ER20 M | 30 | 12 | 28 | 36 | WFB.220.036MINI |
| WFB20-12 | ER20 M | 30 | 12 | 28 | 41 | WFB.220.041MINI |

**A* = Innenliegende Spannmutter / Internal collet nut / Ecrous de serrage du dedans**
**M* = Mini Spannmutter / Mini-collet nut / Mini-ecrous de serrage**

# WFB - Spannzangenfutter 8° Typ ER

WFB - Collet chucks 8° type ER
WFB - Mandrins porte-pinces 8° type ER

**WG 35**

| Size<br>Grandeur<br>**Größe** | **Type**<br>Type<br>**Typ** | [mm]<br><br>**d1** | [mm]<br><br>**d2** | [mm]<br><br>**d5** | [mm]<br><br>**x1** | Order no.<br>Nº de Code<br>**Bestellnummer** |
|---|---|---|---|---|---|---|
| WFB20-12 | ER20 M | 30 | 12 | 28 | 46 | WFB.220.046MINI |
| WFB20-12 | ER20 M | 30 | 12 | 28 | 56 | WFB.220.056MINI |
| WFB20-12 | ER20 | 29 | 12 | 34 | 36 | WFB.220.036K |
| WFB20-12 | ER25 M | 30 | 12 | 35 | 43 | WFB.225.043MINI |
| WFB20-12 | ER25 | 30 | 12 | 42 | 43 | WFB.225.043 |
| WFB24-16 | ER11 M | 40 | 16 | 16 | 42 | WFB.211.042MINI |
| WFB24-16 | ER11 | 40 | 16 | 19 | 6 | WFB.211.006 |
| WFB24-16 | ER11 | 40 | 16 | 19 | 21 | WFB.211.021 |
| WFB24-16 | ER16 A | 40 | 16 | 24 | 16 | WFB.216.A16 |
| WFB24-16 | ER16 | 40 | 16 | 28 | 30 | WFB.216.030 |
| WFB24-16 | ER20 A | 40 | 16 | 28 | 30 | WFB.220.A30 |
| WFB32-20 | ER11 M | 50 | 20 | 16 | 67 | WFB.311.067MINI |
| WFB32-20 | ER11 | 50 | 20 | 19 | 24 | WFB.311.025T |
| WFB32-20 | ER16 A | 50 | 20 | 24 | 10 | WFB.316.A10T |
| WFB32-20 | ER16 A | 50 | 20 | 24 | 16 | WFB.316.A16 |
| WFB32-20 | ER16 | 50 | 20 | 28 | 36 | WFB.316.038 |
| WFB32-20 | ER16 | 50 | 20 | 28 | 160 | WFB.316.160 |
| WFB32-20 | ER20 A | 50 | 20 | 28 | 16 | WFB.320.A16 |
| WFB32-20 | ER25 A | 50 | 20 | 32 | 36 | WFB.325.A36 |
| WFB32-20 | ER25 | 50 | 20 | 42 | 28 | WFB.325.028 |
| WFB32-20 | ER25 | 50 | 20 | 42 | 40 | WFB.325.040 |
| WFB32-20 | ER32 | 50 | 20 | 50 | 42 | WFB.332.042 |

**A* = Innenliegende Spannmutter / Internal collet nut / Ecrous de serrage du dedans**
**M* = Mini Spannmutter / Mini-collet nut / Mini-ecrous de serrage**

# WFB - Softsynchro® mit IKZ

WFB - Softsynchro® with internal cooling system
WFB - Softsynchro® avec arrosage central

**WG 35**

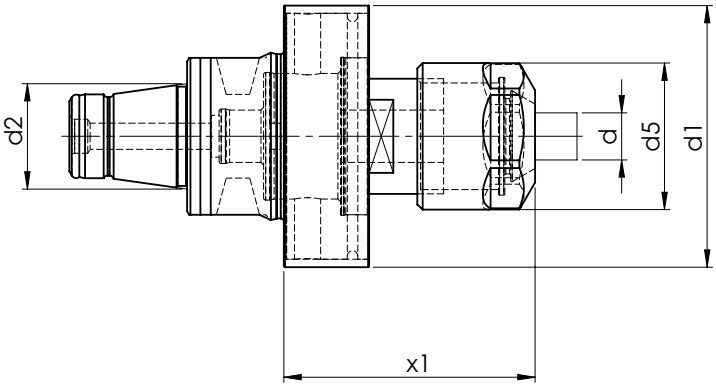

| Gewindebohrer DIN374 / DIN376 | Gewindebohrer DIN371 | Schaft Ø D (mm) | Einstecktiefe E (mm) | Zangen-type |
|---|---|---|---|---|
| M6 | M4 | 4,5 | 29 | ER-GB |
| M8 | M4,5 - M6 | 6 | 31 | ER-GB |
| M10 | M7 | 7 | 31 | ER-GB |
| – | M8 | 8 | 36 | ER-GB |
| M12 | – | 9 | 48 | ER |
| – | M10 | 10 | 43 | ER |

**Technische Details**
Technical specifications

**Spannbereich:** Ø 4,5 - 10,0 mm für Gewindebohrer M4 - M12.
Range of clamping: Ø 4,5 - 10,0 mm for screw tap M4 - M12.

**Längenausgleich auf Druck/Zug:** 0,5 mm.
Length compensation on pressure and tension.

**Kühlmitteldruck:** max. 70 Bar.
Coolant pressure: max. 70 bar.

**Kühlmittelzufuhr durch das Zentrum.**
Coolant supply through the middle.

| Size<br>Grandeur<br>**Größe** | **Type**<br>Type<br>**Typ** | [mm]<br>**d1** | [mm]<br>**d2** | [mm]<br>**d5** | [mm]<br>**x1** | Order no.<br>Nº de Code<br>**Bestellnummer** |
|---|---|---|---|---|---|---|
| WFB20-12 | ER11 | 30 | 12 | 16 | 32,5 | WFB.G20.M8 |
| WFB24-16 | ER11 | 40 | 16 | 16 | 30,5 | WFB.G24.M8 |
| WFB32-20 | ER16 | 50 | 20 | 28 | 48 | WFB.G32.M12 |
| WFB32-20 | ER32 | 50 | 20 | 34 | 48 | WFB.G32.M20 |

# WFB - Hydro-Dehnspannfutter

WFB - Hydraulic expansion chuck
WFB - Mandrin hydraulique

**WG 35**

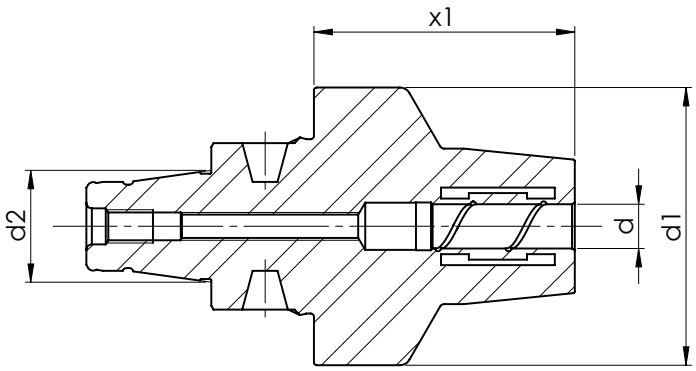

| Size<br>Grandeur<br>**Größe** | [mm]<br><br>**d** | [mm]<br><br>**d1** | [mm]<br><br>**d2** | [mm]<br><br>**x1** | Order no.<br>Nº de Code<br>**Bestellnummer** |
|---|---|---|---|---|---|
| WFB20-12 | 6 | 30 | 12 | 39 | WFB.206.039HDST |
| WFB20-12 | 8 | 30 | 12 | 39 | WFB.208.039HDST |
| WFB20-12 | 10 | 30 | 12 | 39 | WFB.210.039HDST |
| WFB32-20 | 6 | 50 | 20 | 24 | WFB.306.024HDST |
| WFB32-20 | 8 | 50 | 20 | 24 | WFB.308.024HDST |
| WFB32-20 | 10 | 50 | 20 | 29 | WFB.310.029HDST |
| WFB32-20 | 12 | 50 | 20 | 34 | WFB.312.034HDST |
| WFB32-20 | 14 | 50 | 20 | 34 | WFB.314.034.HDST |
| WFB32-20 | 16 | 50 | 20 | 42 | WFB.316.042.HDST |

# WFB-Drehhalter W-T mit IKZ

WFB - Turning tool holder W-T with internal cooling system
WFB - Rotatif porte-outil W-T avec arrosage central

**WG 35**

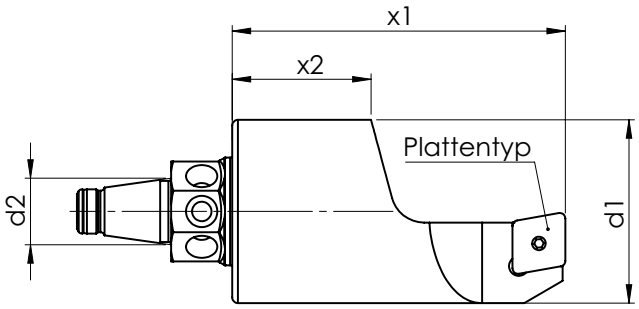

| Type<br>Type<br>**Typ** | **Form** |
|---|---|
| C09 | |
| D11 | |
| V11 | 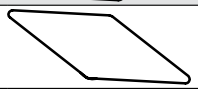 |

| Size<br>Grandeur<br>**Größe** | **Type**<br>Type<br>**Typ** | [mm]<br><br>**d1** | [mm]<br><br>**d2** | [mm]<br><br>**x1** | [mm]<br><br>**x2** | Order no.<br>Nº de Code<br>**Bestellnummer** |
|---|---|---|---|---|---|---|
| WFB20-12 | C09 | 33 | 12 | 60 | 25 | WFB.2DH.C09/L |
| WFB20-12 | C09 | 33 | 12 | 60 | 25 | WFB.2DH.C09/R |
| WFB20-12 | D11 | 33 | 12 | 60 | 25 | WFB.2DH.D11/L |
| WFB20-12 | D11 | 33 | 12 | 60 | 25 | WFB.2DH.D11/R |
| WFB20-12 | V11 | 33 | 12 | 60 | 25 | WFB.2DH.V11/L |
| WFB20-12 | V11 | 33 | 12 | 35 | 10 | WFB.2DH.V11.R.X=35 |
| WFB20-12 | V11 | 33 | 12 | 60 | 25 | WFB.2DH.V11/R |
| WFB32-20 | C09 | 50 | 20 | 80 | 25 | WFB.3DH.C09/R |
| WFB32-20 | D11 | 50 | 20 | 80 | 25 | WFB.3DH.D11/R |
| WFB32-20 | V11 | 50 | 20 | 80 | 25 | WFB.3DH.V11/R |

**Lieferung erfolgt ohne Schneidwerkzeuge**
Delivery without cutting tools / Livraison sans outils de coupe

# WFB-Klemmhalter W-T HORN Mini mit IKZ

WFB - Toolholder W-T HORN Mini with internal cooling system
WFB - Porte-outil W-T HORN Mini avec arrosage central

**WG 35**

**Kühlmitteldüse verstellbar**
Coolant nozzle adjustable

**Schneideplatte B114 links**

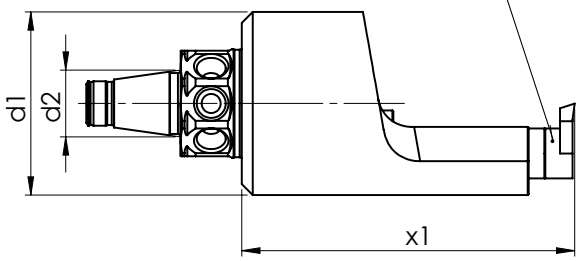


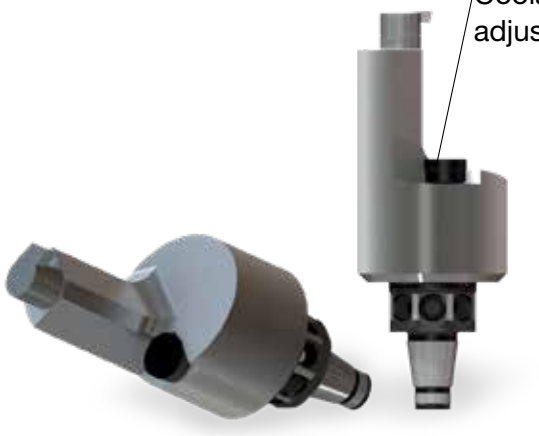

| Size<br>Grandeur<br>**Größe** | **Type**<br>Type<br>**Typ** | [mm]<br><br>**d1** | [mm]<br><br>**d2** | [mm]<br><br>**x1** | Order no.<br>Nº de Code<br>**Bestellnummer** |
|---|---|---|---|---|---|
| WFB20-12 | 114 | 33 | 12 | 60 | WFB.2H0.114 |
| WFB32-20 | 114 | 50 | 20 | 80 | WFB.3H0.114 |

**Lieferung erfolgt ohne Schneidwerkzeuge**
Delivery without cutting tools / Livraison sans outils de coupe

# WFB-Klemmhalter W-T HORN Supermini® mit IKZ

WFB - Toolholder W-T HORN Supermini® with internal cooling system
WFB - Porte-outil W-T HORN Supermini® avec arrosage central

**WG 35**

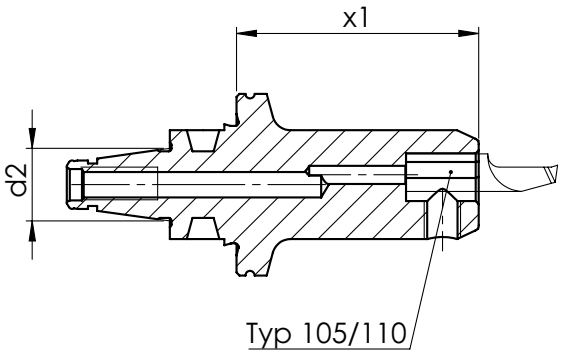

| Size<br>Grandeur<br>**Größe** | **Type**<br>Type<br>**Typ** | [mm]<br><br>**d1** | [mm]<br><br>**d2** | [mm]<br><br>**x1** | Order no.<br>Nº de Code<br>**Bestellnummer** |
|---|---|---|---|---|---|
| WFB20-12 | 105 | 18 | 12 | 40 | WFB.2H0.105 |
| WFB20-12 | 105 | 18 | 12 | 55 | WFB.2H0.105.055 |
| WFB20-12 | 110 | 20 | 12 | 40 | WFB.2H0.110 |
| WFB32-20 | 105 | 50 | 20 | 40 | WFB.3H0.105 |
| WFB32-20 | 105 | 50 | 20 | 55 | WFB.3H0.105.055 |
| WFB32-20 | 110 | 50 | 20 | 40 | WFB.3H0.110 |

**Lieferung erfolgt ohne Schneidwerkzeuge**
Delivery without cutting tools / Livraison sans outils de coupe

# WFB - HORN Fräserschaft mit IKZ

WFB - HORN milling shank with internal cooling
WFB - HORN arbre de coupe avec arrosage central

**WG 35**

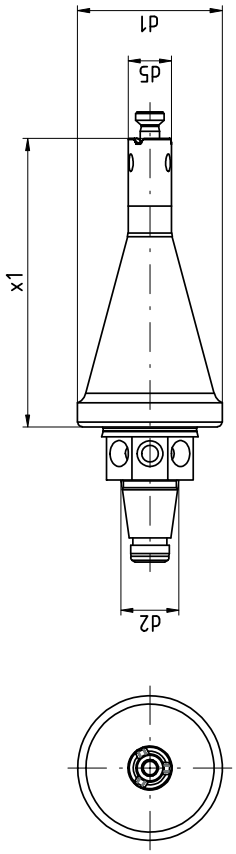

| Size<br>Grandeur<br>**Größe** | **Type**<br>Type<br>**Typ** | [mm]<br><br>**d1** | [mm]<br><br>**d2** | [mm]<br><br>**d5** | [mm]<br><br>**x1** | Order no.<br>Nº de Code<br>**Bestellnummer** |
|---|---|---|---|---|---|---|
| WFB20-12 | 311/611 | 30 | 12 | 9 | 60 | WFB.2HO.M311.060 |
| WFB20-12 | 313/613 | 30 | 12 | 13,3 | 60 | WFB.2HO.M313.060 |

# WFB-Bohrstangenhalter

WFB - Boring bar holder
WFB - Porte-outil pour barres d'alésage

**WG 35**

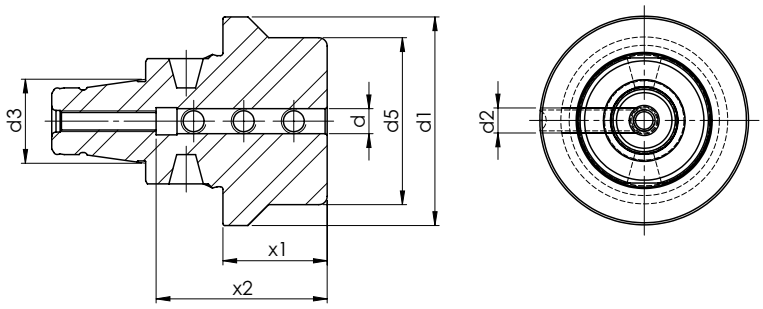

| Size<br>Grandeur<br>**Größe** | [mm]<br>**d** | [mm]<br>**d1** | [mm]<br>**d2** | [mm]<br>**d3** | [mm]<br>**d5** | [mm]<br>**x1** | [mm]<br>**x2** | Order no.<br>Nº de Code<br>**Bestellnummer** |
|---|---|---|---|---|---|---|---|---|
| WFB20-12 | 3 | 30 | M3 | 12 | 18 | 40 | 15 | WFB.2E0.003 |
| WFB20-12 | 4 | 30 | M4 | 12 | 18 | 40 | 15 | WFB.2E0.004 |
| WFB20-12 | 5 | 30 | M5 | 12 | 18 | 40 | 41 | WFB.2E0.005 |
| WFB20-12 | 6 | 30 | M6 | 12 | 18 | 40 | 41 | WFB.2E0.006 |
| WFB20-12 | 8 | 30 | M6 | 12 | 22 | 40 | 41 | WFB.2E0.008 |
| WFB20-12 | 10 | 30 | M6 | 12 | 22 | 40 | 41 | WFB.2E0.010 |
| WFB20-12 | 12 | 30 | M8 | 12 | 30 | 40 | 35 | WFB.2E0.012 |
| WFB20-12 | 16 | 30 | M8 | 12 | 30 | 40 | 35 | WFB.2E0.016 |
| WFB20-12 | 20 | 30 | M8 | 12 | 33 | 40 | 35 | WFB.2E0.020 |
| WFB20-12 | 1/4" | 30 | M6 | 12 | 18 | 40 | 30 | WFB.2E0.1/4 |
| WFB20-12 | 1/8" | 30 | M3 | 12 | 18 | 40 | 25 | WFB.2E0.1/8 |
| WFB20-12 | 3/16" | 30 | M4 | 12 | 18 | 40 | 25 | WFB.2E0.3/16 |
| WFB20-12 | 3/4" | 30 | M8 | 12 | 33 | 40 | 35 | WFB.2E0.019 |
| WFB32-20 | 6 | 50 | M6 | 20 | 40 | 25 | 41 | WFB.3E2.006 |
| WFB32-20 | 8 | 50 | M6 | 20 | 40 | 25 | 41 | WFB.3E2.008 |
| WFB32-20 | 10 | 50 | M6 | 20 | 40 | 25 | 41 | WFB.3E2.010 |
| WFB32-20 | 12 | 50 | M8x1 | 20 | 40 | 25 | 41 | WFB.3E2.012 |
| WFB32-20 | 16 | 50 | M8x1 | 20 | 40 | 25 | 41 | WFB.3E2.016 |
| WFB32-20 | 20 | 50 | M8x1 | 20 | 50 | 40 | 41 | WFB.3E2.020 |
| WFB32-20 | 25 | 50 | M8x1 | 20 | 50 | 55 | 51 | WFB.3E2.025 |

# WFB - Aufsteckfräserdorne mit IKZ

WFB - Milling machine arbors with internal cooling system
WFB - Mandrins porte-fraises avec arrosage central

**WG 35**

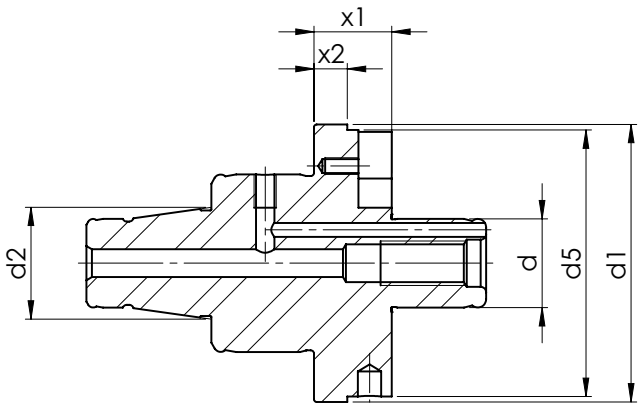

**Verwendung:** Zur Aufnahme von Fräsern mit Quernut
**Lieferumfang:** Mit eingebauten Mitnehmersteinen und Fräseranzugschraube

**Application:** For cutters with key drive
**Scope of supply:** With driver and cruciform screw

**Application:** Pour le montage de fraises avec rainures transversales
**Livraison:** Avec entrainement par tenons et vis de serrage

| Size<br>Grandeur<br>**Größe** | [mm]<br><br>**d** | [mm]<br><br>**d1** | [mm]<br><br>**d2** | Smm]<br><br>**d5** | [mm]<br><br>**x1** | mm]<br><br>**x2** | Order no.<br>Nº de Code<br>**Bestellnummer** |
|---|---|---|---|---|---|---|---|
| WFB24-16 | 16 | 40 | 16 | 30 | 14 | 5 | WFB.16A.2414 |
| WFB32-20 | 13 | 50 | 20 | 20 | 14 | 6 | WFB.13A.3214 |
| WFB32-20 | 16 | 50 | 20 | 40 | 14 | 6 | WFB.16A.3214 |
| WFB32-20 | 22 | 50 | 20 | 48 | 9 | 6 | WFB.22A.3209T |
| WFB32-20 | 22 | 50 | 20 | 48 | 14 | 6 | WFB.22A.3214 |
| WFB32-20 | 27 | 50 | 20 | 55 | 14 | 6 | WFB.27A.3214 |

# WFB - Verschlussstopfen

WFB - Closing plug
WFB - Bouchon d’étanchéité

**WG 35**

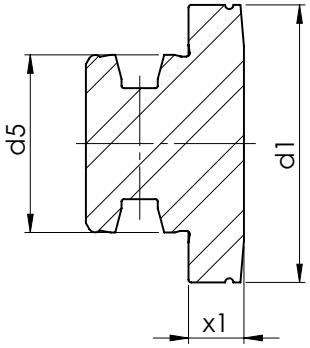

| Size<br>Grandeur<br>**Größe** | [mm]<br><br>**d1** | [mm]<br><br>**d2** | [mm]<br><br>**x1** | Order no.<br>Nº de Code<br>**Bestellnummer** |
|---|---|---|---|---|
| WFB20-12 | 29 | 20 | 10 | WFB.212.000K |
| WFB20-12 | 30 | 20 | 10 | WFB.212.000 |
| WFB24-16 | 40 | 24 | 10 | WFB.241.200 |
| WFB32-20 | 50 | 32 | 10 | WFB.320.000 |

# WFB - Reduzierungen / Verlängerungen

WFB - Reductions / Extensions
WFB - Réductions / Prolongations

**WG 35**

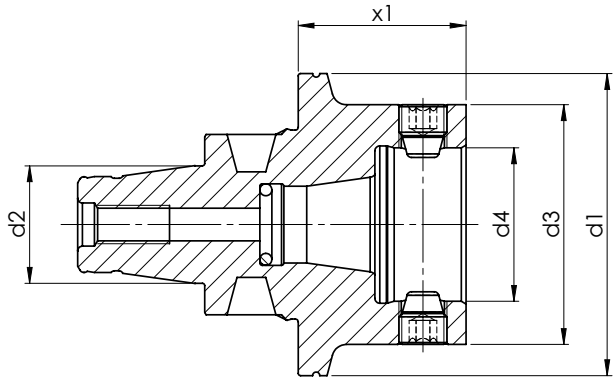

| Size<br>Grandeur<br>**Größe** | [mm]<br><br>**d1** | [mm]<br><br>**d2** | [mm]<br><br>**d3** | [mm]<br><br>**d4** | [mm]<br><br>**x1** | Order no.<br>Nº de Code<br>**Bestellnummer** |
|---|---|---|---|---|---|---|
| WFB20-12 | 30 | 12 | 30 | 12 | 20 | WFB.V20.020 |
| WFB20-12 | 30 | 12 | 30 | 12 | 33,5 | WFB.V20.033,5 |
| WFB24-16 | 40 | 16 | 30 | 12 | 10 | WFB.R24.B20 |
| WFB32-20 | 50 | 20 | 30 | 12 | 15 | WFB.R32.B20 |
| WFB32-20 | 50 | 20 | 40 | 16 | 15 | WFB.R32.B24 |
| WFB32-20 | 63 | 25 | 40 | 25 | 30 | WFB.R32.R40 |

# WFB - Kontrolldorne

WFB - Test arbors
WFB - Mandrins de contrôle

**WG 35**

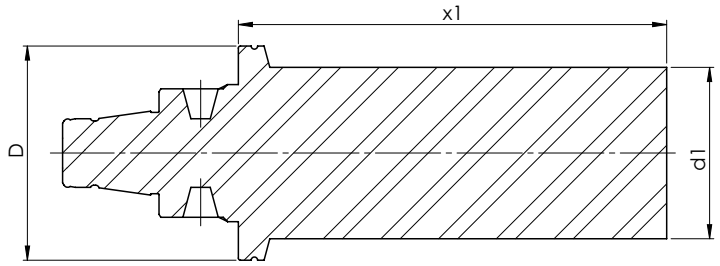

**Verwendung:** Zur Abnahme von Werkzeugmaschinen gemäß ISO-Empfehlung R230 oder zur Überprüfung der Werkzeugspindel

**Application:** For machine tools according to ISO recommendations R230 or for testing the tool spindle

**Application:** Pour la recette technique des machines conforme recommandation ISO R230

| Size<br>Grandeur<br>**Größe** | [mm]<br><br>**D** | [mm]<br><br>**d1** | [mm]<br><br>**x1** | Order no.<br>Nº de Code<br>**Bestellnummer** |
|---|---|---|---|---|
| WFB20-12 | 30 | 16 | 60 | WFB.KD1.060 |
| WFB20-12 | 29 | 16 | 60 | WFB.KD1.060K |
| WFB24-16 | 40 | 25 | 80 | WFB.KD2.080 |
| WFB32-20 | 50 | 40 | 100 | WFB.KD3.100 |

# WFB - Bohrstangen-Rohlinge

WFB - Boring bar-blanks
WFB - Barres à l'etat brut

**WG 35**

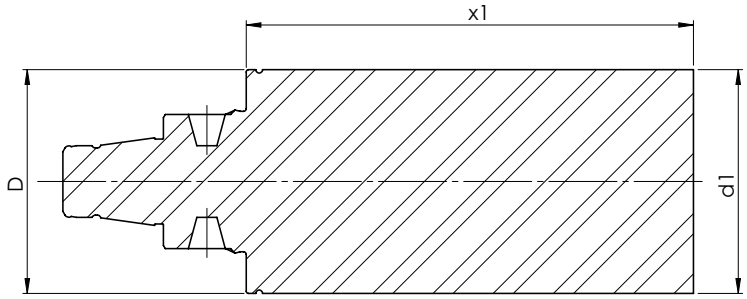

| Size<br>Grandeur<br>**Größe** | [mm]<br><br>**d** | [mm]<br><br>**d1** | [mm]<br><br>**x1** | Order no.<br>Nº de Code<br>**Bestellnummer** |
|---|---|---|---|---|
| WFB20-12 | 30 | 33 | 60 | WFB.R20.060 |
| WFB20-12 | 30 | 33 | 60 | WFB.R20.X6S* |
| WFB24-16 | 40 | 45 | 80 | WFB.R24.045.080.SX* |
| WFB32-20 | 50 | 22 | 60 | WFB.R32.022.060.SX* |
| WFB32-20 | 50 | 50 | 100 | WFB.R32.050.100.SX* |

*** Material: 31CrMoV9**

# Spannzangen-Sätze mit Holzsockel System ER / ESX

Collets System ER / ESX in wooden board
Pinces de serrage Systéme ER / ESX en socle de bois

**WG 35**

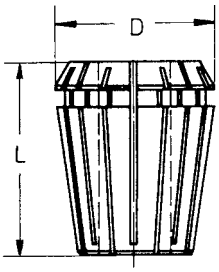


| | D | L |
|---|---|---|
| 426 E | 17 | 27 |
| 428 E | 21 | 31,5 |
| 430 E | 26 | 34 |
| 470 E | 33 | 40 |
| 472 E | 41 | 46 |

**ER 40 (3-26) 472 E**
23 Spannzangen
4-26 mm Ø, 1 mm gestuft

Art. Nr. 12.326.OHS

Art. Nr. 12.326.OHS.EP

**zusätzlich** (wie Abbildung)
gegen Mehrpreis
1 Spannzange mit 3 mm Ø

Art. Nr. 12.326.030

Art. Nr. 12.326.030EP

**ER 32 (2-20) 470 E**
18 Spannzangen
3-20 mm Ø, 1 mm gestuft

Art. Nr. 12.220.OHS

Art. Nr. 12.220.OHS.EP

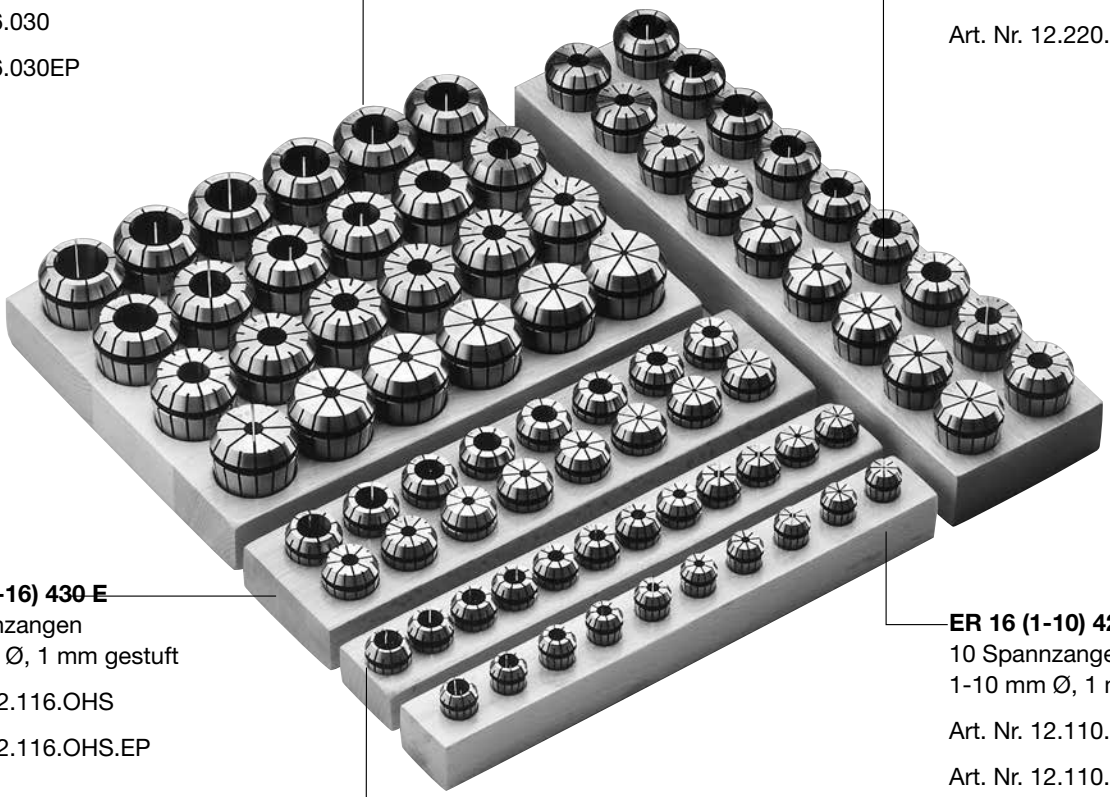

**ER 25 (2-16) 430 E**
15 Spannzangen
2-16 mm Ø, 1 mm gestuft

Art. Nr. 12.116.OHS

Art. Nr. 12.116.OHS.EP

zusätzlich (wie Abbildung)
gegen Mehrpreis
1 Spannzange mit 1 mm Ø

Art. Nr. 12.116.010

Art. Nr. 12.116.010EP

**ER 20 (2-13) 428 E**
12 Spannzangen
2-13 mm Ø, 1 mm gestuft

Art. Nr. 12.113.OHS

Art. Nr. 12.113.OHS.EP

**ER 16 (1-10) 426 E**
10 Spannzangen
1-10 mm Ø, 1 mm gestuft

Art. Nr. 12.110.OHS

Art. Nr. 12.110.OHS.EP

# Spannzangen System ER / ESX ER11 / ER16 / ER20

Collets System ER / ESX
Pinces de serrage Systéme ER / ESX

**WG 11**

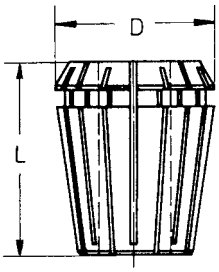


| | D | L |
|---|---|---|
| 424 E | 11,5 | 18 |
| 426 E | 17 | 27 |
| 428 E | 21 | 31,5 |

| Ø | Order no<br>Nº de Cde.<br>**Bestellnummer** |
|---|---|
| **ER 11 (1 – 8) 424 E** | |
| 1,0 | 12.107.010 |
| 1,5 | 12.107.015 |
| 2,0 | 12.107.020 |
| 2,5 | 12.107.025 |
| 3,0 | 12.107.030 |
| 3,5 | 12.107.035 |
| 4,0 | 12.107.040 |
| 4,5 | 12.107.045 |
| 5,0 | 12.107.050 |
| 5,5 | 12.107.055 |
| 6,0 | 12.107.060 |
| 6,5 | 12.107.065 |
| 7,0 | 12.107.070 |
| 8,0 | 12.107.080* |

| Ø | Order no<br>Nº de Cde.<br>**Bestellnummer** |
|---|---|
| **ER 16 (1 – 12) 426 E** | |
| 1,0 | 12.110.010 |
| 1,5 | 12.110.015 |
| 2,0 | 12.110.020 |
| 2,5 | 12.110.025 |
| 3,0 | 12.110.030 |
| 3,5 | 12.110.035 |
| 4,0 | 12.110.040 |
| 4,5 | 12.110.045 |
| 5,0 | 12.110.050 |
| 5,5 | 12.110.055 |
| 6,0 | 12.110.060 |
| 6,5 | 12.110.065 |
| 7,0 | 12.110.070 |
| 7,5 | 12.110.075 |
| 8,0 | 12.110.080 |
| 8,5 | 12.110.085 |
| 9,0 | 12.110.090 |
| 9,5 | 12.110.095 |
| 10,0 | 12.110.100 |
| 10,5 | 12.110.105* |
| 11,0 | 12.110.110* |
| 11,5 | 12.110.115* |
| 12,0 | 12.110.120* |

| Ø | Order no<br>Nº de Cde.<br>**Bestellnummer** |
|---|---|
| **ER 20 (1,0 – 15) 428 E** | |
| 1,0 | 12.113.010* |
| 2,0 | 12.113.020 |
| 3,0 | 12.113.030 |
| 4,0 | 12.113.040 |
| 5,0 | 12.113.050 |
| 6,0 | 12.113.060 |
| 7,0 | 12.113.070 |
| 8,0 | 12.113.080 |
| 9,0 | 12.113.090 |
| 10,0 | 12.113.100 |
| 11,0 | 12.113.110 |
| 12,0 | 12.113.120 |
| 13,0 | 12.113.130 |
| 13,5 | 12.113.135* |
| 14,0 | 12.113.140* |
| 14,5 | 12.113.145* |
| 15,0 | 12.113.150* |

***Sondergröße**
Special size
Grandeur speciale

# Spannzangen System ER / ESX ER25 / ER32 / ER40

Collets System ER / ESX
Pinces de serrage Systéme ER / ESX

**WG 11**

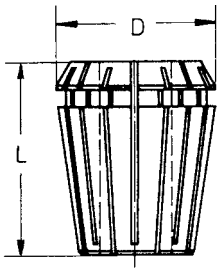


| | D | L |
|---|---|---|
| 430 E | 26 | 34 |
| 470 E | 33 | 40 |
| 472 E | 41 | 46 |

| Ø | Order no<br>Nº de Cde.<br>**Bestellnummer** |
|---|---|
| **ER 25 (1 – 20) 430 E** | |
| 1,0 | 12.116.010* |
| 2,0 | 12.116.020 |
| 3,0 | 12.116.030 |
| 4,0 | 12.116.040 |
| 5,0 | 12.116.050 |
| 6,0 | 12.116.060 |
| 7,0 | 12.116.070 |
| 8,0 | 12.116.080 |
| 9,0 | 12.116.090 |
| 10,0 | 12.116.100 |
| 11,0 | 12.116.110 |
| 12,0 | 12.116.120 |
| 13,0 | 12.116.130 |
| 14,0 | 12.116.140 |
| 15,0 | 12.116.150 |
| 16,0 | 12.116.160 |
| 16,5 | 12.116.165* |
| 17,0 | 12.116.170* |
| 17,5 | 12.116.175* |
| 18,0 | 12.116.180* |
| 18,5 | 12.116.185* |
| 19,0 | 12.116.190* |
| 19,5 | 12.116.195* |
| 20,0 | 12.116.200* |

| Ø | Order no<br>Nº de Cde.<br>**Bestellnummer** |
|---|---|
| **ER 32 (2 – 22) 470 E** | |
| 2,0 | 12.220.020* |
| 3,0 | 12.220.030 |
| 4,0 | 12.220.040 |
| 5,0 | 12.220.050 |
| 6,0 | 12.220.060 |
| 7,0 | 12.220.070 |
| 8,0 | 12.220.080 |
| 9,0 | 12.220.090 |
| 10,0 | 12.220.100 |
| 11,0 | 12.220.110 |
| 12,0 | 12.220.120 |
| 13,0 | 12.220.130 |
| 14,0 | 12.220.140 |
| 15,0 | 12.220.150 |
| 16,0 | 12.220.160 |
| 17,0 | 12.220.170 |
| 18,0 | 12.220.180 |
| 19,0 | 12.220.190 |
| 20,0 | 12.220.200 |
| 21,0 | 12.220.210* |
| 22,0 | 12.220.220* |

| Ø | Order no<br>Nº de Cde.<br>**Bestellnummer** |
|---|---|
| **ER 40 (3 – 30) 472 E** | |
| 3,0 | 12.326.030* |
| 4,0 | 12.326.040 |
| 5,0 | 12.326.050 |
| 6,0 | 12.326.060 |
| 7,0 | 12.326.070 |
| 8,0 | 12.326.080 |
| 9,0 | 12.326.090 |
| 10,0 | 12.326.100 |
| 11,0 | 12.326.110 |
| 12,0 | 12.326.120 |
| 13,0 | 12.326.130 |
| 14,0 | 12.326.140 |
| 15,0 | 12.326.150 |
| 16,0 | 12.326.160 |
| 17,0 | 12.326.170 |
| 18,0 | 12.326.180 |
| 19,0 | 12.326.190 |
| 20,0 | 12.326.200 |
| 21,0 | 12.326.210 |
| 22,0 | 12.326.220 |
| 23,0 | 12.326.230 |
| 24,0 | 12.326.240 |
| 25,0 | 12.326.250 |
| 26,0 | 12.326.260 |
| 27,0 | 12.326.270* |
| 28,0 | 12.326.280* |
| 29,0 | 12.326.290* |
| 30,0 | 12.326.300* |

***Sondergröße**
Special size
Grandeur speciale

# WFB - Ersatzteile / Zubehör

WFB - Spare parts / Accessories
WFB - Pièces de rechange / Accessoires

**WFB - Kegelgewindestifte**
Threaded taper pins / Vis coniques filetées

| For Size<br>Pour Grandeur<br>**Für Größe** | Order no<br>Nº de Cde.<br>**Bestellnummer** |
|---|---|
| WFB20-12 | WFS.M6x0,75.TORX 15 Plus |
| WFB20-12 | WFS.M6x1.TORX |
| WFB24-16 | WFS.M8x1.TORX |
| WFB32-20 | WFS.M10x1x11 |

**Drehmoment-Schraubendreher auf Anfrage lieferbar!**
Torque screwdriver on request available!
Tournevis dynamométrique disponible sur demande!

| For Size<br>Pour Grandeur<br>**Für Größe** | Order no<br>Nº de Cde.<br>**Bestellnummer** |
|---|---|
| WFB20-12 | WFB.020.T15.PLUS |

**Drehmomentset**
Torque set

| For Size<br>Pour Grandeur<br>**Für Größe** | Order no<br>Nº de Cde.<br>**Bestellnummer** |
|---|---|
| WFB20-12/24-16 | WF.88103001000 |

W&F

HORN

**FINDEN SIE JETZT IHRE PASSENDE WERKZEUGLÖSUNG.**
FIND YOUR RIGHT TOOLING SOLUTION NOW.

**www.phorn.de**


**DEUTSCHLAND, STAMMSITZ**
GERMANY, HEADQUARTERS
—
Hartmetall Werkzeugfabrik
Paul Horn GmbH
Unter dem Holz 33 – 35
D-72072 Tübingen

Tel +49 7071 / 70040
Fax +49 7071 / 72893

info@phorn.de
www.phorn.de


**Find your country:**
**www.phorn.com/countries**

**Geprüfte Qualität /** proofed quality

BLUecoMPETENCE
Alliance Member
Partner of the Engineering Industry Sustainability Initiative

KHOWFLANGDE, 09/2018, Printed in Germany